ANDREW WRIGHT
IPTD
JUNE 22, 1996

WINNING @ INTERNET CONTENT MARKETING PLAN

ACTIVEX | BRINGING INTERNET CONTENT TO LIFE

MS6 5005708
CONFIDENTIAL

SITUATION ANALYSIS

WINNING THE PLATFORM GAME:

Microsoft's success to date as a platform company has primarily been driven by the availability of compelling applications for Microsoft operating systems. Operating systems, including Windows 95, Window NT etc, are a means to an end and not an end in themselves. End users buy computers and operating systems to run applications.

If we look back to the success of Windows, we see two general kinds of applications that have driven its success to date. With Windows 3.0, sales were driven by individual desktop productivity applications including Lotus123, Microsoft Excel, Word Perfect and Microsoft Word. With Windows 3.1, the situation changed slightly and it was the Office Suite that drove the volume. This is still the case with Windows 95, however there is yet another new class of applications that is starting to drive platform sales - Interactive MM applications. This is the first time that we have seen a large percentage of platform sales driven by 'content' rather than pure applications.

Up until now, our success has been driven by our ability to develop strong API's within the Win32 family to get ISVs to write to those APIs with their applications. A good example of this is the work we did with the DirectX APIs and the success we have had driving Windows 95 into the consumer multimedia space. In general we have been very successful with this approach, as writing to the Win32 API has provided 'developers with access to the largest installed base of compatible machines to sell their applications into.

THE INTERNET REVOLUTION:

The phenomenal growth of the Internet has dealt the first serious challenge to this strategy. The Internet at its core is network that runs a widely accepted group of protocols TCP/IP, RTP, HTTP etc.. The rise of the Internet has been driven by the success of a series of 'platforms' that utilize these protocols at their core and provide a set of APIs for ISVs to develop on top of. By far the most successful platform to date has been Netscape's, with Netscape Navigator on the browser and Netscape Suite Spot on the server. The core threat for Microsoft is the potential for this platform to abstract the Win32 API. For example, if Netscape continues its success in getting ISVs and ICVs to develop applications for Netscape's client/server Api's, these API's could be the most important API's in the future putting Win32 and Microsoft's platform position in jeopardy. Although this seems like a long shot based on the primitive nature of the web in many application areas, the success of Navigator with a 40 + million installed base and the rapid evolution of the web capabilities make it much more real than many people care to think. After all Win 3.0 wasn't perfect went it first shipped, but its promise of a new way of computing and improved productivity generated momentum and ISV loyalty, which has transformed it into one of the most successful franchises in business history.

PLATFORM STRUCTURE:

The diagram below outlines the critical components to any successful platform from the core platform services to the content and applications. It is important to understand that the tools are critical to driving platform adoption as they are :

1) essential to the developers of applications /content
2) key to exploiting the unique capabilities of the platform.

For Microsoft to be successful in heading off the Internet challenge, we need to win at all levels in combination with our partners. The area that this plan will focus on is the top box and how we can win with our platform in the content community. Although, over time lines between what we refer to as content and what we refer to as applications will blur , it makes sense to differentiate between the two in the short term to get the right kind of focus.

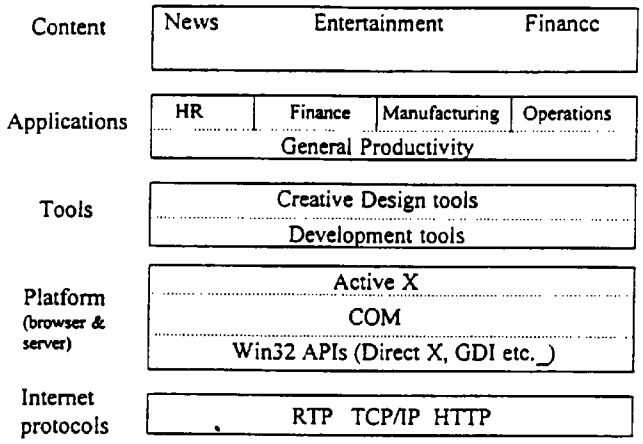

Figure 1.0 Industry structure

CONTENT : INDUSTRY STRUCTURE:

In order to be effective with ActiveX in the Interent commercial content space, we need to approach the problem from a number of vantage points. The diagram below provides a high level view of the inter-relationships between the critical parties that influence the content developers agenda. The advertisers are critical in that they provide the revenue that drives the business model, the tools vendors provide the technology to develop the content and the consumers are the ultimate audience for the content.

MS6 5005710
CONFIDENTIAL

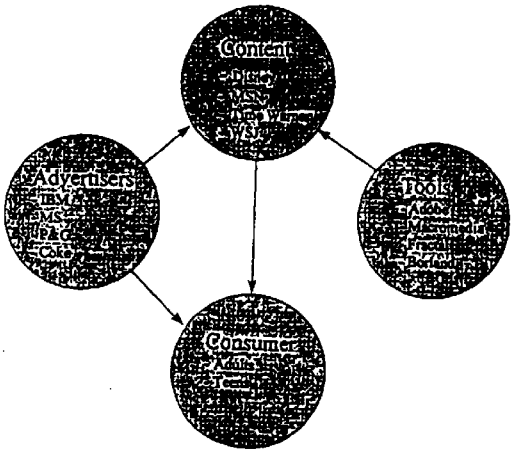

Figure 2: Inter-relationships

In general, there are three distinct business models that are serving as the basis for emerging content based businesses:

- Transaction based : Fee charged on a transaction by transaction basis. This kind of a business model is well suited to applications like games where the application is downloaded over the network for a one time fee and then can be re-used free of charge.
- Subscription based : Revenue generated by annual subscriptions. This model has been proven in the magazine and newspaper worlds for years and is supplemented in most cases by advertising.
- Advertising based: In this model, access to the content is free of charge and money is made through advertising. This model ends up being one of the best in mass market situations where the goal is to get deep penetration. In general, this model end up producing a few winners which receive the bulk of the ad spending. A good example of this model in action is the broadcast networks NBC, ABC, CBS etc.

CONTENT : THE EVOLVING LANDSCAPE:

The rise of the Internet provides a glorious opportunity for companies and individuals in the interactive content production business. Up until now, the only way to effectively to develop and distribute MM content for personal computers was via CD-ROM. The combination of the limitations of personal computer's MM capability and the expense of securing adequate distribution have prevented this from becoming the commercial business opportunity which many had hoped for. Although the Internet, on its own, will not dramatically alter this picture short term, the Internet in combination with advances in PC Multimedia and storage promise a radically better consumer experience and more efficient distribution paradigm which will in turn drive adoption. This is very similar to what happened in DTP where the combination of the Mac GUI/ Aldus Pagemaker and last BUT NOT least the Laser printer created a revolution. With MM content it will be the combination of 1) a standardized MM enabled browsing capability - the viewer, 2) The WWW as a publishing vehicle and 3) a new generation of WEB focused authoring tools, that will create the same kind of effect.

The diagram below (figure 2) illustrates how content applications will take advantage of both local and network based storage resources. Over time as the bandwidth to the WEB increases, more and more of the content will reside on the network.

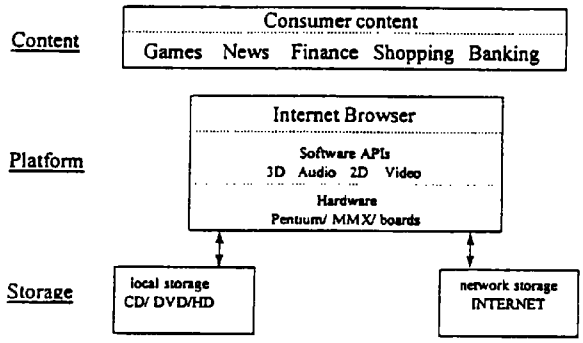

Figure 3: The content platform.

For content that is primarily text based (news, financial information, banking etc.), applications will be designed to use the network for storage as the advantages of having 'live content'

outweigh bandwidth advantages provided by local storage. On the other hand, content that is richer in terms of MM support (games & edutainment titles) will rely on a hybrid solution, either caching media components locally of distributing them via CD-ROM and relying on the network for up to the minute information or multi- user/player activity.

Today, content on the web is at its infancy with the most popular sites being news oriented and well suite to text based presentation. The table below shows a sampling of the top web sites and as we can see, the majority of them are companies that are providing products and services to people and companies getting on the web. The business of commercial content distribution on the WEB is in its infancy and it is starting with news and reference information.

Site category	Site Name	Description
Internet platform company	Netscape	Product and company info / web attractio
	Microsoft	Product an Company Information
	Sun	Java information
Hardware company	Compaq	Company and product information
	Apple	Company and product information
	Digital	Company and product information
	Hewlett Packard	Company and product information
	IBM	
Infrastructure company	Intel	Company and product information
	Cisco	Company and product information
Sotware company	Novell	Company and product information
Access provider	PSInet	Company and service information
	Uunet technologies	Company and service information
Commerce/ shopping	Amazon books	Books for sale
	Cdnow	Music CDs
	Fun City classifieds	Classified ads
	Internet shopping network	General shopping info
News and sports	CNN interactive	News and information
	Electronic telegraph	News and information
	ESPN Sportszone	News and information
	USA today	News and information
	Wall St. Journal	News and information
Reference	City net	Local information
	Britanica Online	Encyclopedia information
	Bartlett's quotations	famour quote reference
	The Global Health network	Health information reference
Art and Music	MTV online	TV show copliment
	The Louvre	Art gallery reference
	The national museum of art	Famour art gallery information

Figure 4 : Top 100 web site sampling

CONTENT: PRODUCTION PROCESS

The WEB application development team has evolved rapidly over the last few months and will continue to do so for the foreseeable future as platform capabilities and authoring tools improve. In general, however the team can be characterized by the diagram below. The core

MS6 5005713
CONFIDENTIAL

of the team is the project manager who coordinates activities across the whole team and ensures that the site is delivered to expectation on time and on budget. The balance of the 'core' team consists of data-base experts, programmers and HTML coders, each of whom play a key role in developing the technical infrastructure for the site. The other side of the team is a group of creative designers who develop the graphical layout for the site as well as the 'media components' that populate the layout. Today, most of the resources on this team are general graphic designers due to the fact that the media components are 2D static graphics or simple 2D animations. As the web gets more bandwidth and as we see more people going with hybrid approaches, the design team will become segmented with individuals specializing in the different media types. (audio specialist/ video specialist/ 3D animator etc.). This is exactly how things have evolved in the CD-ROM production process.

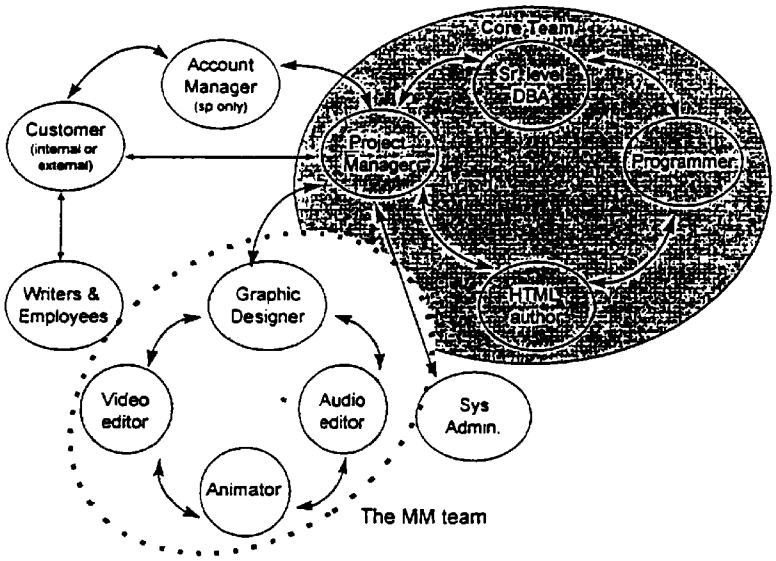

Figure 5: The applications developer team

The diagram below illustrates how the actual production process works. On the left side designers create the MM components, on the bottom the programming components are built to support the required application logic and in the center, the information is brought together

MS6 5005714
CONFIDENTIAL

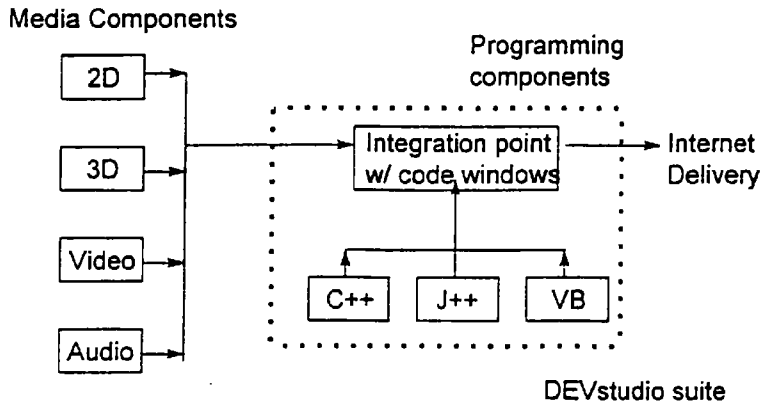

Figure 6 : production process schematic

Our product strategy within IPTD (tools) is focused on winning in the programming community with DEV Studio Suite. This makes sense based on Microsoft existing strength with programmers as well the general requirements for inTRAnet applications. However, it will leave us exposed in the commercial Internet arena as the creative tool and customers play a much more critical role in this area.

The biggest challenge that developers face today is the lack of WEB focused development, process and asset management tools. Today, most of the tools that are used are not optimized for the WEB and there is a lot of 'black art' to getting things working. As you can see from Figure 4, there is tremendous opportunity to re-use media and code components across projects but there needs to be an effective way to track and manage them. The diagram below provides an overview of the dominant tools that are used to generate the media components (left side of figure 6).

MS6 5005715
CONFIDENTIAL

Category	Description	Leading Company	Leading Application
2D			
Animation	sprite animation and compositing	Adobe	After Effects
Paint	2D paint	Fractal	Painter
Compositing	Photo editing and compositing	Adobe	Photoshop
Drawing	2D vector drawing	Adobe	Ilustrator
3D	3D animation	Autodesk	3D Studio
		Fractal/ Raydream	Designer
Video	Video editing and compositing	Adove	Premiere
Audio -			
Midi	Midi based composition		
Wave	Wave editing	Macromedia	Sound-edit
Integration			
MM integration	MM integration and scripting	Macromedia	Director
HTML integration			
DTP integration	Page based integration	Adobe	Pagemaker
		Quark	Xpress

Figure 7: The WEB tools landscape

In general the Macintosh remains the dominant platform for graphic design and MM content production with Windows a distant second. It will be critical for us to change this picture over time in order to ensure future success.

User requirements:

- Better WEB based project management tools.
- Better asset management tools to manage use of media and code assets across the project - facilitated re-use.
- Higher level visual authoring tools for all project members
- Better mechanisms for targeting and optimizing for different browsers from the same tool.

The key trends are:

- Team oriented approaches with functional specialization
- Increased use of multimedia for Internet based commercial sites
- Centralization of teams into dedicated functions

COMPETITION: (under development)

From a platform perspective, our primary competitor is Netscape. They are the only company that has an end to end Internet based platform that competes with ours. In order to really understand the competitive situation, we need to conduct a thorough analysis of Netscape's platform and how their API's work. The key area to focus this analysis on when comparing it to ActiveX for content developers is the Live Media framework which is Netscape 'integrated' set of APIs for MM.

MS6 5005716
CONFIDENTIAL

OPPORTUNITY SUMMARY:

- Make ActiveX relevant to the consumer of content (ala Intel inside). This will be a key part of motivating the content developer to embrace the platform.
- Leverage re-usability benefit of component based software/content to attract content developers. We have a significant advantage vs competition with activeX and COM and we can leverage them and make the process of content development more efficient.
- Providing an integrated, best of breed solution to content developers including tools, browser and server platform. No single company is positioned today to bring together the right overall solution for commercial content developers - we could make it happen in combination with other ISV's and our channel partners.
- Establish Windows NT as the POWER web authoring platform. Although Windows has a long way to go vs Macintosh, the advantages of having the client/ server target platform on the same machine will provide a compelling leverage point.

MISSION & OBJECTIVES

Mission: To establish the ActiveX as the leading object model for commercial web content.

STRATEGIC OBJECTIVES

1 ESTABLISH ACTIVEX COMPATABILITY FOR TOP TOOLS IN EACH MM SOLUTION SEGMENT (TOP TOOLS MEASURED BY UNIT VOLUME INTO PROFESSIONAL SEGMENTS)

- Creation tools - Export capability
- Integration tools - containment capability

RATIONALE : The bulk of commercial content that gets created for the web will be created with high level authoring tools. It is essential to our success that we convince the leading authoring tool companies to support the activeX technology in their products.

2 ESTABLISH ACTIVEX AS THE LEADING SOFTWARE COMPONENT ARCHITECTURE FOR WEB BASED MULTIMEDIA COMPONENTS AS MEASURED BY TOTAL UNIT SALES OF ACTIVEX CONTENT COMPONENTS.

RATIONALE: The key benefit that content developers will get from ActiveX technology is the ability to re-use components and to purchase inexpensive components over the WEB. Our success in establishing a successful after market of Active X compatible media-components will heavily influence the adoption of ActiveX technology.

3 GAIN LEADING SHARE FOR ACTIVEX AS THE PRIMARY COMPONENT ACRCHITECTURE FOR TOP 100 WEB SITES. (LEADING SITES BASED ON TOTAL HITS RECORDED IN ANNUAL PERIOD.)

RATIONALE: The top 100 commercial Internet Sites will drive 90% of the traffic. Our ability to get these sites to adopt activeX technology will be vital to our achieving our overall goal.

SUB-STRATEGIES

SUB-STRATEGY 1

1.1 Establish comprehensive co-marketing/ bundling programs with leading creative tools vendors leveraging Internet Studio brand and targeting commercial Internet developers.

1.2 License Forms3 technology to leading integration tool providers. - best way to get to Active Control containment and HTML compatability.

1.3 Develop and communicate compelling Internet focused product strategy for the Active X multimedia platform.

1.4 Establish focused developer programs an support programs to target creative tool community

SUB-STRATEGY 2

2.1 Facilitate development, marketing and distribution of re-usable ActiveX MM components.

2.2 Fund development and marketing of leading edge ActiveX MM components

2.3 Demonstrate the productivity value of using ActiveX based components in WEB applications.

SUB-STRATEGY 3

3.1 Market benefits of ActiveX technology to WEB based consumers (Intel inside concept)

3.2 Establish ActiveX as the best mechanism for creating compelling interactive content

3.3 Aggressively market innovative uses of ActiveX technology in commercial web sites.

3.4 Set up tight account management and support resources for leading WEB sites.