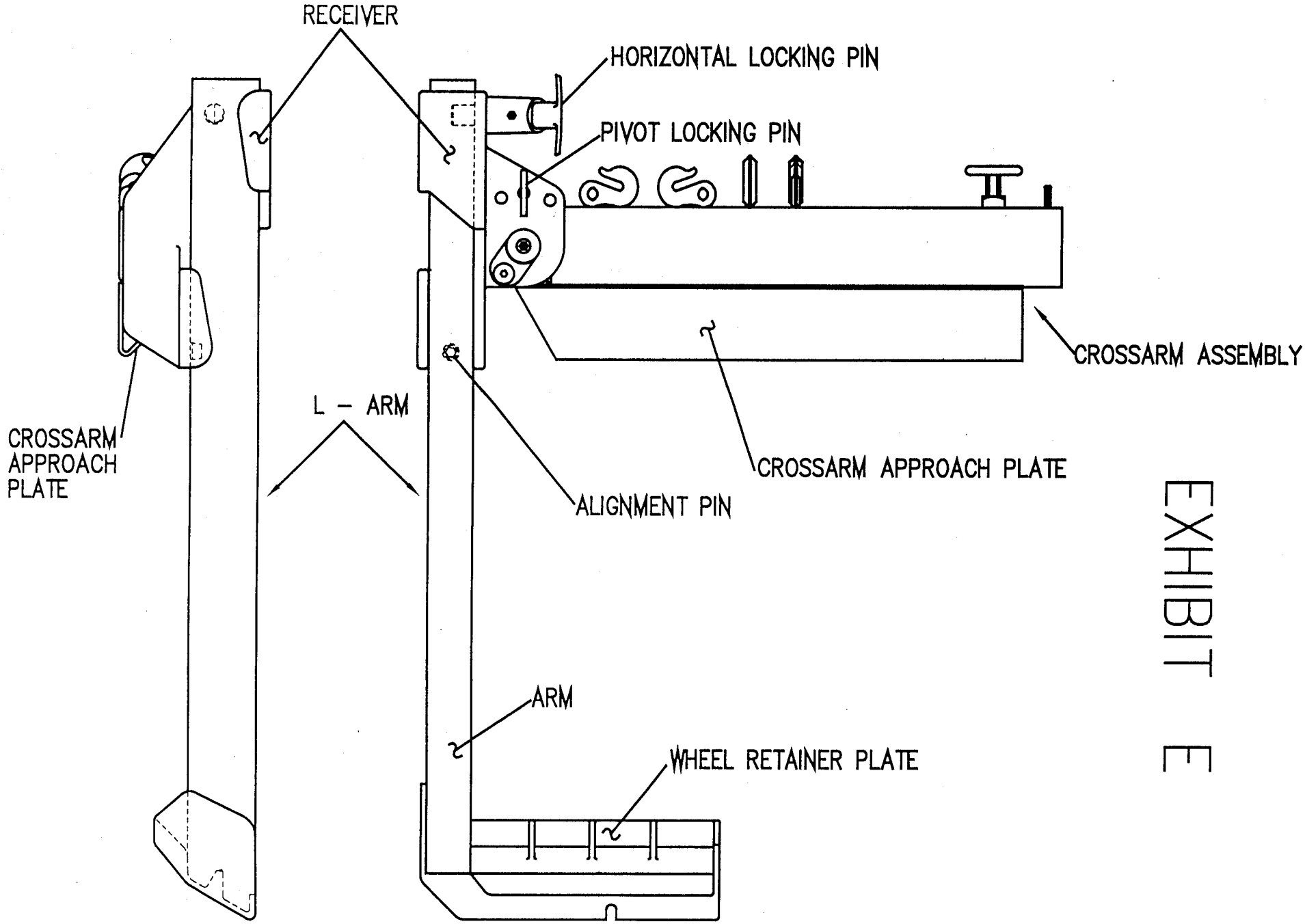
RECEIVER
HORIZONTAL LOCKING PIN
PIVOT LOCKING PIN
CROSSARM ASSEMBLY
CROSSARM APPROACH PLATE
L - ARM
CROSSARM APPROACH PLATE
ALIGNMENT PIN
ARM
WHEEL RETAINER PLATE

EXHIBIT E