Appendix B

100% Remedial Design

Final Design
100% Design

Remedial Design

Area 9/10

Southeast Rockford Groundwater Contamination Superfund Site

Rockford, Illinois

CERCLIS ID No. ILD981000417

March 31, 2007

Prepared for:

Hamilton Sundstrand Corporation
4747 Harrison Avenue
Rockford, Illinois 61125

Submitted by:

SECOR

SECOR International Incorporated
446 Eisenhower Lane North
Lombard, Illinois 60148

Final Design
100% Design

Remedial Design

Area 9/10

Southeast Rockford Groundwater Contamination Superfund Site

Rockford, Illinois

CERCLIS ID No. ILD981000417

March 31, 2007

Prepared for:

Hamilton Sundstrand Corporation
4747 Harrison Avenue
Rockford, Illinois 61125

Submitted by:

SECOR

SECOR International Incorporated
446 Eisenhower Lane North
Lombard, Illinois 60148

LICENSED PROFESSIONAL ENGINEER
JOHN G. PUCKETT
062-059203
STATE OF ILLINOIS

TABLE OF CONTENTS

SECTION		PAGE NO.
LIST OF ACRONYMNS		**iv**
SECTION 1.0 INTRODUCTION		**1-1**
1.1	PURPOSE OF 100% DESIGN REPORT	1-1
1.2	SITE BACKGROUND	1-3
	Site Description	1-3
	HS Plant #1 Facility Constituents of Concern	1-4
	Hydrogeological Setting	1-5
	Extent of Soil Impacts	1-6
1.3	DOCUMENT OVERVIEW	1-7
SECTION 2.0 AIR SPARGE REMEDIATION SYSTEM		**2-1**
2.1	PILOT TEST REVIEW	2-1
2.2	AIR SPARGE TREATMENT AREA	2-2
2.3	AIR SPARGE FINAL DESIGN	2-2
	Injection Well Design	2-3
	Equipment, Conveyance Piping, and Manifold	2-3
SECTION 3.0 SOIL VAPOR EXTRACTION REMEDIATION SYSTEM		**3-1**
3.1	PILOT TEST REVIEW	3-1
3.2	SOIL VAPOR EXTRACTION TREATMENT AREA	3-1
3.3	SOIL VAPOR EXTRACTION SYSTEM FINAL DESIGN	3-2
	Extraction Well Design	3-2
	Equipment, Conveyance Piping, and Manifold	3-3
3.4	AIR AND WATER SEPARATION	3-4
SECTION 4.0 EXTRACTED AIR TREATMENT AND OPERATION		4-1
4.1	VAPOR PHASE TREATMENT	4-1
4.2	ELECTRICAL REQUIREMENTS	4-1
4.3	SYSTEM CONTROLS	4-2
SECTION 5.0 OUTSIDE CONTAINER STORAGE AREA GROUNDWATER ATTENUATION ENHANCEMENT AND SOIL EXCAVATION		**5-1**
5.1	NATURAL ATTENUATION ENHANCEMENT	5-1

5.2 WELL ABANDONMENT 5-1
5.3 SOIL EXCAVATION ACTIVITIES 5-2
5.4 OFFSITE SOIL DISPOSAL 5-2
5.5 EXCAVATION BACKFILL 5-3
5.6 CLAY CAP CONSTRUCTION 5-3
5.7 LOADING DOCK SOIL REMEDIATION 5-3

SECTION 6.0 INSTITUTIONAL CONTROLS 6-1
6.1 GROUNDWATER USE RESTRICTIONS AND GROUNDWATER MANAGEMENT ZONE DEVELOPMENT 6-1
6.2 COMMERCIAL/INDUSTRIAL LAND USE RESTRICTION 6-1
6.3 ENGINEERED BARRIER DESIGNATION 6-2

SECTION 7.0 APPLICABLE OR RELEVANT AND APPROPRIATE REQUIREMENTS 7-1
7.1 APPLICABLE REQUIREMENTS 7-1
7.2 RELEVANT OR APPROPRIATE REQUIREMENTS 7-2
7.3 OTHER REQUIREMENTS TO BE CONSIDERED AND ARAR ALTERNATIVES 7-2
7.4 TYPE OF ARARS 7-3
7.5 IDENTIFIED FEDERAL AND STATE ARARS 7-4

SECTION 8.0 MINIMIZATION OF IMPACTS 8-1
8.1 MINIMIZED PUBLIC IMPACTS 8-1
8.2 MINIMIZED ENVIRONMENTAL IMPACTS AND SUSTAINABLE DESIGN 8-1

SECTION 9.0 PERMITS 9-1
9.1 ACTIONS SUBJECT TO PERMIT REQUIREMENTS 9-1
9.2 PERMITS REQUIRED 9-1

SECTION 10.0 CONTENT OF FINAL DESIGN 10-1
10.1 FINAL 100% DESIGN DRAWINGS 10-1
10.2 TECHNICAL SPECIFICATIONS 10-2
10.3 AMENDED HEALTH AND SAFETY PLAN 10-2
10.4 OPERATION, MAINTENANCE, AND MONITORING PLAN 10-2
10.5 CONSTRUCTION QUALITY ASSURANCE PROJECT PLAN 10-3

TABLES

Table 7.1 Summary of ARARS

DRAWINGS

Drawing Y1 Cover Sheet and Area 9/10 Site Location
Drawing Y2 Utility and Property Ownership Map
Drawing Y3 Well Locations and Ground Surface Elevations
Drawing Y4 Groundwater and Soil Remediation Areas
Drawing Y5 Air Sparge and Soil Vapor Extraction Treatment Zone Details
Drawing Y6 Well Construction Details
Drawing Y7 Clay Cap Engineered Barrier Cross Section
Drawing P1 Piping and Instrumentation Diagram Legend
Drawing P2 Air Sparge, Soil Vapor Extraction, Treatment Piping and Instrumentation Diagram
Drawing M1 Air Sparge, Soil Vapor Extraction, and Air Treatment Plant Equipment Layout
Drawing M2 Air Sparge and Soil Vapor Extraction Piping Details
Drawing E1 Electrical Symbols Legend
Drawing E2 Electrical One-Line Diagram

APPENDICES

Appendix A Air Sparge System Design Calculations
Appendix B Air Sparge System Equipment Specifications
Appendix C Soil Vapor Extraction System Design Calculations
Appendix D Soil Vapor Extraction System Equipment Specifications
Appendix E Air Treatment Equipment Specifications
Appendix F Soil Vapor (Flammable, Maximum, and Average) VOC Loading Calculations
Appendix G Final Outside Container Storage Area Source Mass Reduction Work Plan
Appendix H IEPA Model Environmental Land Use Control Form

List of Acronyms

1,1,1-TCA	1,1,1 Trichloroethane
1,1,2-TCA	1,1,2 Trichloroethane
1,1-DCE	1,1-Dichloroethene
1,2-DCA	1,2-Dichloroethane
1,2-DCE	1,2-Dichloroethene
acfm	Actual Cubic Feet per Minute
Agency	United States and or Illinois Environmental Protection Agency
AOC	Administrative Order on Consent
Area	Area 9/10
ARARs	Applicable or Relevant and Appropriate Regulations
AS	Air Sparge
bgs	Below Ground Surface
CAA	Clean Air Act
CDM	Camp Dresser McKee
CERCLA	Comprehensive Environmental Response Compensation and Liability Act
cfm	Cubic Feet per Minute
CFR	Code of Federal Regulations
cm	Centimeter
COC	Constituent of Concern
CSI	Construction Specifications Institute
CWA	Clean Water Act
ELUC	Environmental Land Use Control
EQ	The Environmental Quality Company
FFS	Focused Feasability Study
ft	Foot or Feet
GAC	Granular Activated Carbon
GMZ	Groundwater Management Zone
H2O	Water
HASP	Health and Safety Plan
HDPE	High Density Polyethylene
HP	Horsepower
HRC-X	Hydrogen Release Compound Extended Release Formula
HS	Hamilton Sundstrand
HSWA	Hazardous and Solid Waste Act
IAC	Illinois Administrative Code
IEPA	Illinois Environmental Protection Agency
lbs	Pounds
LEL	Lower Explosive Limit
mA	milli Amps
MC	Methylene Chloride
MCL	Maximum Contaminant Level
MSL	Mean Sea Level
NCP	National Contingency Plan
NEMA	National Electrical Manufacturers Association
NEPA	National Environmental Policy Act
OSA	Outside Container Storage Area
OU	Operable Unit

List of Acronyms (Continued)

PCE	Tetrachloroethene
PDI	Pre-Design Investigation
PLC	Programmable Logic Controller
ppmv	Parts Per Million Volume
PRG	Preliminary Remediation Goals
psi	Pounds per Square Inch
PVC	Polyvinyl Chloride
RCRA	Resource Conservation and Recovery Act
RD	Remedial Design
RI	Remedial Investigation
RO	Remedial Objective
ROD	Record of Decision
ROI	Radius of Influence
SARA	Superfund Amendments and Reauthorization Act
scfm	Standard Cubic Feet per Minute
SDR	Standard Dimension Ratio
SDWA	Safe Drinking Water Act
sec	Second
SER	Southeast Rockford Groundwater Contamination Superfund Site
Site	Hamilton Sundstrand Plant #1
SOW	Statement of Work
SS	Stainless Steel
SVE	Soil Vapor Extraction
TACO	Tiered Approach to Corrective Action Objectives
TBC	To Be Considered
TCE	Trichloroethene
USEPA	United States Environmental Protection Agency
VC	Vinyl Chloride
VOC	Volatile Organic Compound
ZOI	Zone of Influence

1.0 INTRODUCTION

This document provides the 100% Final Design for the Remedial Design for Source Control for the Area 9/10 portion of the Southeast Rockford Groundwater Contamination Superfund Site (CERCLIS ID No. ILD981000417) located in the City of Rockford, Winnebago County, Illinois.

Hamilton Sundstrand Corporation (HS) entered into an Administrative Order on Consent (AOC) with the United States Environmental Protection Agency (USEPA) on January 13, 2003 for the completion of a Remedial Design (RD) for source control for Area 9/10. Preparation of the 100% Final Design document was specified as part of the February 27, 2003 Statement of Work (SOW) associated with the RD.

1.1 PURPOSE OF 100% DESIGN REPORT

The purpose of this document is to allow a tiered review by the USEPA of the basis for design for the selected remedy at Area 9/10 of the Southeast Rockford Groundwater Contamination Site (SER). The selected remedy consists of air sparging and soil vapor extraction to address impacted groundwater (leachate) at the Hamilton Sundstrand Plant # 1 facility within Area 9/10. The remedy is described in the June 11, 2002 Record of Decision (ROD) for Operable Unit Three (OU-3) Source Control. In addition, soil identified as source material at the Outside Container Storage Area (OSA) will be excavated and disposed offsite along with limited groundwater biological enhancement in this location. This 100% design document presents final design information for key components of the remedy for USEPA review and comment.

A summary of the selected remediation alternatives, air sparging (AS) and soil vapor extraction (SVE), from the ROD is as follows:

Groundwater (leachate) Remedy:

- *Alternative SCL-9/10E: Enhanced Air Sparging, which consisted of installing injection wells along the boundary of the Groundwater Management Zone (GMZ) and source*

area, was the selected remedy. Enhanced Air Sparging will involve the placement of air injection wells down gradient and in the more highly-contaminated areas. Air will be injected into the contaminated groundwater, causing the contaminants to volatilize into air pockets in the soil above the water table. The air sparging will have to be operated in conjunction with the Soil Vapor Extraction System SCS-9/10C. Vapors will be collected underground prior to their treatment with activated carbon.

- *The leachate remedy also includes institutional controls on groundwater usage within the GMZ, installation of monitoring wells, and implementation of a groundwater (leachate) monitoring program. Groundwater (leachate) will be monitored at predetermined intervals for 30 years, per Resource Conservation and Recovery Act (RCRA) post-closure groundwater monitoring requirements. Monitoring will typically consist of collecting groundwater and analyzing for volatile organic compounds (VOCs) and, where appropriate, parameters that measure biological activity.*

Soil Remedy:

- *Alternative SCS-9/10C: Soil Vapor Extraction with vapor treatment using activated carbon was the selected remedy for soils at Area 9/10. Under this alternative, contaminated soils will be remediated in situ via a SVE system. The system will consist of installing a series of wells connected by an underground piping system. A blower will provide a source of negative pressure to extract vapors from the subsurface. Extraction wells will be screened in the vadose zone, where they will remove the contaminants from the unsaturated zone, as well as groundwater (leachate) contaminants that might diffuse from the surface of the water table. A pilot program will be conducted prior to the design of the SVE system to determine well spacing and in situ air permeability. Vapors collected from the SVE unit will be treated through the use of granular activated carbon. Granular activated carbon can be used to treat vapors at this area because of the lower expected concentrations of contaminants from soils.*

- *The vapor treatment scenario may have to be reevaluated based upon additional data collection from Area 9/10 and the results of the SVE pilot program.*

The aggregate number of air sparge wells and SVE wells for soil and groundwater/leachate remediation identified in the Southeast Rockford Source Control Operable Unit Focused Feasibility Study (FFS) prepared by Camp Dresser McKee (CDM) dated September 5, 2000 for the selected remedies in the ROD were 15 and 10, respectively.

1.2 SITE BACKGROUND

Site Description

Area 9/10 (Area) is an industrial area located within the City of Rockford, Winnebago County, Illinois. The Area is bound by Eleventh Street on the east, Twenty-Third Avenue on the north, Harrison Avenue on the south, and Sixth Street on the west. Hamilton Sundstrand Corporation was the only potentially responsible party identified by the Illinois Environmental Protection Agency (IEPA) for Area 9/10. The Hamilton Sundstrand (HS) Plant #1 facility (the Site) is located within Area 9/10. The Area 9/10 and HS Site locations are shown on Drawing Y1. The address of the facility is 2421 Eleventh Street. The Site is located in the southeast portion of the City of Rockford, Illinois, in Section 36 of Township 44 north, Range 1 east, of Rockford Township in Winnebago County. The HS Plant # 1 facility within Area 9/10 is a generally rectangular area of approximately 13 acres. The Site is bound on the north by 23rd Avenue and former Mid-States Industrial (2401 Eleventh Street), on the south by the former Nylint/DRB property (2525 Eleventh Street) and the Rockford Products Parking lot, to the west by 9th Street, and on the east by 11th Street. The Site utilities and property boundary for the HS Plant #1 facility are shown on Drawing Y2.

The SER site consists of three Operable Units, each with a corresponding ROD. Operable Unit One (Drinking Water Operable Unit) provided some area residents with a safe drinking water supply by connecting 283 homes to the city water supply. Operable Unit Two (Groundwater Operable Unit) addressed the area-wide groundwater contamination. An additional 264 homes were connected to the city water supply and a remedial investigation (RI) was conducted to characterize the nature and extent of the groundwater contamination and to provide information on source areas responsible for contamination. This operable unit identified four source areas (Areas 4, 7, 9/10, and 11). Operable Unit Three (Source Control Operable Unit) began as a State lead action to select remedies for each of the

source areas. Based on the field investigation activities conducted by the IEPA at each of the areas, cleanup alternatives and selected remedies were presented in the May 2002 Source Control Remedies ROD issued by the USEPA and the IEPA.

The selected source control remedies for Area 9/10 are enhanced air sparging for leachate, soil vapor extraction with treatment of vapors by granular activated carbon for soil, and institutional controls. The term leachate is defined as water that passed through waste and picked up contaminants present in the waste.

HS Plant # 1 Facility Constituents of Concern

The HS Plant #1 facility was identified during the RI, perfomed by CDM for IEPA, and the Pre-Design Investigation (PDI), undertaken by HS, as containing groundwater impacted with VOCs above the Preliminary Remediation Goals (PRGs) identified in the ROD. The compounds detected at concentrations above the PRGs are referred to as constituents of concern (COCs). A network of 28 monitoring wells was established at the facility during the PDI. The monitoring well locations and topography (monitoring well ground surface elevations) are shown on Drawing Y3.

The RI also identified COCs in groundwater with concentrations above PRGs. The PRGs were based on 35 IAC Part 620 Groundwater Quality Class I groundwater, 35 IAC Part 742 Tiered Approach to Corrective Action Objectives (TACO), and USEPA maximum contaminant level (MCL) regulations. The groundwater COCs were identified as 1,1-dichloroethene (1,1-DCE); 1,2-dichloroethane (1,2-DCA); 1,2-dichloroethene (1,2-DCE); ethylbenzene; tetrachloroethene (PCE); 1,1,1-trichloroethane (1,1,1 TCA), 1,1,2-trichloroethane (1,1,2 TCA); trichloroethene (TCE); and vinyl chloride (VC), as agreed upon with USEPA and IEPA. The historical groundwater analytical results from the western portion of the building are shown on Drawing Y4.

The soil COCs for Area 9/10 were identified as: 1,1-DCE; methylene chloride (MC) (possible laboratory artifact); PCE; 1,1,1 TCA; 1,1,2 TCA; and TCE as agreed upon with USEPA and IEPA.

The following sections describe the Site conditions considered in the selection and evaluation of the preferred remedy.

Hydrogeological Setting

The geological profile encountered at the HS Plant #1 Facility generally consists of surface pavement (asphalt, concrete pad, or floor slab) with a gravel fill subbase from ground surface to one to two feet below ground surface (bgs), underlain by silty clay to a depth of four to eight feet bgs, which is underlain by poorly to well graded sand (predominantly fine to medium sand) with some gravelly units to below the maximum depth of the borings at the site (140 feet). The sand and gravel has been reported to extend to a depth of 230 to 250 feet bgs in the vicinity of Area 9/10. This glacial outwash is identified as the Mackinaw Member of the Henry Formation. Bedrock encountered in borings/wells in the area is part of the Ordovician period Ancell Group (sandstone) of the Paleozoic era.

The vadose zone extends within the sand to a depth of approximately 30 feet bgs. Within the vadose zone sand there is a discontinuous one to four feet thick silt layer at approximately 18 to 23 feet bgs which was identified in the OSA. This layer was observed only in a limited area in the northwest portion of the Site. No other substantive or continuous fine grained layers or lenses were documented during the PDI investigation activities. At depth within the aquifer some coarser grained gravelly sand and sandy gravel units were observed.

The uppermost aquifer at the Site is the sand and gravel aquifer. The potentiometric surface level ranges between 30 to 35 feet bgs. This level varies somewhat seasonally and appears to mirror the general rainfall pattern of the area. Over the past several years the water level has typically been approximately 33 feet bgs. The aquifer is greater than 100 feet in thickness at the Site. The groundwater flow is to the west-southwest at a gradient of approximately 0.0008 ft/ft (0.6 ft / 715 ft in March 2006) toward the Rock River. The hydraulic conductivity of the sand aquifer is 1.22×10^{-3} cm/sec and the aquifer porosity is assumed to be 0.25 (both from the CDM FFS 2000). Using this data, it is estimated that the average linear velocity (also referred to as groundwater seepage velocity) is likely between 4 and 10 feet per year.

Extent of Soil Impacts

The initial RI activities completed by CDM in Area 9/10 consisted of soil gas samples and limited soil sampling. A more comprehensive Pre-Design Investigation consisting of 38 soil borings across the Site, including adjacent properties and public right of ways, was completed by HS in 2003 and 2004. This effort identified three areas of soils which exceed the PRG (and TACO) remediation objectives (ROs). These areas were the OSA, the loading dock and former container storage area, and the western part of the South Alley. The ROD requires that source material be addressed in the remedial design.

Soil in the OSA may be considered source material. Concentrations of 1,1,1-TCA, 1,1-DCE, PCE, TCE, mercury, cadmium, and lead were detected in samples S1 through S8 above ROs. A number of the constituents were found in only relatively shallow soil (less than 8 feet bgs). PCE and cadmium were the only constituents detected above ROs in deeper soils. These metals are not COCs as defined in the ROD. However, the OSA is also subject to RCRA regulations, and these metals are of concern from this perspective.

In the loading dock and former container storage areas, soil concentrations at four boring locations (S12, S13, S14, and SMW-15) exceeded ROs. The elevated concentrations were all in the shallow soil sample intervals at these locations. There were no RO exceedances in the deeper soil samples analyzed at these locations and the impact is believed to be limited vertically. Impacted soil in the loading dock area will be addressed. This area is presently covered with asphalt.

There was a soil PCE RO exceedance at the SMW-5 location (5 to 7 feet) southwest of the HS Plant # 1 building. There was, however, no PCE detected in the deep soil sample at this location. This area is not considered source material. This location is, however, adjacent to the treatment zone of the air sparge and soil vapor extraction system in the South Alley.

The VOC impacted soil at the OSA is a 65 foot by 50 foot area of approximately 3,300 square feet. HS plans to address these soils by excavation with offsite soil disposal. The impacted soil is primarily in the soil column from ground surface to six feet in depth. The

total estimated in place quantity of impacted soil at the OSA is 550 cubic yards (850 tons). Drawing Y4 illustrates the lateral extent of soil impact above ROs at the OSA. A work plan for the excavation of the source material at the OSA was submitted to USEPA dated April 27, 2005 and was approved with modification on August 15, 2005.

1.3 DOCUMENT OVERVIEW

The purpose of this document is to present the basis of design and final details for the groundwater and soil remedy within Area 9/10 at the SER Site. Key components of this system as defined in this document include:

- Air Sparge System pilot test data review, basis of design, well design, piping, and equipment for the treatment area in the western portion of the South Alley is discussed in Section 2 of this document;

- Soil Vapor Extraction system pilot test data review, basis of design, well design, piping, and equipment for a capture zone for the air sparge injected air in the western portion of the South Alley is discussed in Section 3 of this document;

- Extracted air treatment basis of design for granular activated carbon and system controls equipment is discussed in Section 4 of this document;

- OSA groundwater attenuation enhancement basis of design for material placement, pre-placement monitoring and post-placement monitoring is discussed in Section 5 of this document;

- OSA soil excavation basis of design including necessary well abandonment, waste characterization, excavation, loading, transport, offsite disposal of source material, backfill, cap placement, and loading dock soil remediation is discussed in Section 5 of this document;

- Institutional controls for a Site groundwater use restriction (including development of a Groundwater Management Zone [GMZ]), commercial/industrial land use restriction, and an engineered barrier at the OSA are discussed in Section 6 of this document;

- Applicable or relevant and appropriate requirements are discussed in Section 7 of this document;

- Minimization of impacts to the public and the environment are discussed in Section 8 of this document;

- Necessary permits are discussed in Section 9 of this document; and

Section 10.0 provides a discussion of the final design (100% design) package documents consisting of the following; technical specifications; amended health and safety plan; operation, maintenance, and monitoring plan (OM&M), and construction quality assurance project plan (CQAPP) as outlined in the SOW as required in the ROD. These documents are submitted to the USEPA for review and approval.

2.0 AIR SPARGE REMEDIATION SYSTEM

Air sparging is a proven in-situ remedial technology for VOCs that consists of injecting air into the formation below the water table. The injected air transfers volatile organic compounds from the dissolved phase to the vapor phase. The air sparging system will be coupled with a SVE system. The SVE system is designed to remove the vapor phase VOCs generated by the air sparge process from the subsurface. The remediation system is designed to treat dissolved phase chlorinated solvent impact located in the western portion of the South Alley of the Site and to also serve as a remediation barrier to mitigate potential future impact as a result of contaminate migration.

2.1 PILOT TEST REVIEW

An air sparge pilot test was performed on one well and 15 AS and SVE monitoring points in the OSA area over the period of December 9-11, 2003. The test used a helium tracer to confirm the radius of influence of the injected air. Air was injected at a depth of 43 feet bgs at an air injection rate of 44 to 48 acfm, 8 to 10 feet below the water table surface. The pilot test data indicated a zone of influence (ZOI) of 20 feet from the injection point. The air sparge system design is based upon the results of the pilot study as the geology across the Site is very consistent. The pilot test results are therefore considered representative of the planned treatment area located in the western portion of the South Alley. The pilot test results were positive and showed that AS is a viable technology for the treatment of the dissolved phase impact at the Site. The pilot test results provided the following air sparge system design parameters:

Radius of Influence – vacuum/pressure
Zone of Influence – air sparge
Air injection flow rate

Complete pilot test results can be found in the Pilot Test Summary Report dated October 1, 2004 and submitted to the USEPA.

2.2 AIR SPARGE TREATMENT AREA

The treatment area is located in the western portion of the South Alley and is approximately 450 feet long by 30 feet wide. The length of the treatment area was determined from groundwater analytical results from the PDI activities. For groundwater, a concentration more than two orders of magnitude above the PRG/MCL for Class I groundwater was used as the criteria for designation as source material. The width of the treatment area is defined by the design ZOI of the air sparge system. The planned AS system design consists of 15 air sparge wells. The air sparge well spacing is based upon the 20 foot ZOI measured during the AS pilot test. The design spacing is based on a ZOI of 15 feet to provide an area of overlap between sparge wells. The location of the AS treatment zone area and well locations are shown on Drawings Y4 and Y5, respectively.

2.3 AIR SPARGE FINAL DESIGN

The 15 air sparge wells will be divided into three banks of five wells. Each bank of five wells will act as an independent treatment cell. The treatment cells will operate successively utilizing a timing relay and air solenoid valves. Each cell will be pulsed for four hours initially. The pulse time may be adjusted based upon evaluation of the initial removal results.

Sparge injection pressure was calculated assuming a 17 feet treatment zone, 0.2 pounds per square inch (psi) air entry pressure for the filter pack, and 0.2 psi air entry pressure for the formation. Line losses due to friction were calculated using the Darcy-Weisbach equation. The design calculations and assumptions used are provided in Appendix A. An air sparge injection flow rate of 20 cubic feet per minute (cfm) was determined based upon the standard design model described in the United States Air Force (USAF) manual dated June 3, 2002 titled “Air Sparging Design Paradigm.” The total air sparge design flow rate per cell is 100 cfm. The minimum air sparge injection pressure to overcome the hydrostatic pressure is estimated to be 10.38 psi. The value includes an additional five feet of hydrostatic head to allow for higher than average water table levels.

The initial sparge period of four hours per cell was adopted based on design examples detailed in the USAF manual "Air Sparging Design Paradigm". The sparge air will be supplied by a Reitschle model DTB (06) 180 MACRO, 15 horsepower (hp), rotary vane compressor or equivalent. The compressor specifications and performance curves are provided in Appendix B.

Injection Well Design

The design calculations assume a treatment zone depth of 17 feet. The depth to groundwater is approximately 33 feet bgs [elevation 695 feet above mean sea level (MSL)]. The air sparge injection wells will have a screened interval of two feet. The bottom of the treatment zone is assumed to be at the top of the injection well screen at a depth of approximately 50 feet bgs. The depth of the injection wells will be 17 feet below the typical groundwater level for a total depth of approximately 52 feet bgs. The injection wells will be constructed with 1.5 inch diameter, 0.010 slot 304 stainless steel (SS) well screen, 304 SS riser, with schedule 40 polyvinyl chloride (PVC) riser above the water table. The wells will be installed using 8 inch (or greater) hollow stem augers or sonic drilling methods. The filter pack will be red flint #3545 (or equivalent) and extend 12 inches above the screen. A 12 inch sugar sand filter collar will be placed above the filter pack. The annular space of the sparge wells will be sealed using bentonite chips (or pellets) hydrated in place. The bentonite seal will extend three feet above the filter collar. Bentonite/cement grout (94% cement) will be used to seal the remainder of the bore hole to a depth of 42 inches bgs. At the 42 inch level, a PVC Tee will be welded to the riser and connected to the pressurized air supply line. A ball valve will be placed in line to regulate flow to the sparge well. The well heads will have liquid filled pressure gauges and sampling/monitoring ports installed. Construction diagrams for the air sparge wells and the well vaults are shown on Drawings Y6 and M2, respectively.

Equipment, Conveyance Piping, and Manifold

The air supply lines coming off the main header will have the following equipment:

- Brass gate valve

- Timer controlled solenoid valve
- Dwyer model UV-C112 rotometer
- Liquid filled 0-30 psi pressure gauge
- 4-20 mA output pressure transducer
- PVC ball valve

The brass gate valve will control air flow to the well. Air flow will be monitored using the rotometer. The solenoid valves will allow air flow to the sparge wells based upon timer relay programming. The timer relays will be incorporated in a programmable logic controller (PLC) allowing sequential air flow to each treatment cell. The liquid filled pressure gauges will allow visual monitoring of line pressure. The pressure transducers will allow remote monitoring of the line pressure using telemetry. The PVC ball valve will be used for gross flow adjustments and for cutting off air flow completely.

The air supply line coming off the compressor effluent will be equipped with the following:

- Pressure relief valve
- High pressure switch
- Low pressure switch
- Flow meter
- Temperature gauge
- Liquid filled pressure gauge
- 4-20 mA output pressure transducer
- Ball valve
- Bleed valve

The pressure relief valve is a safety mechanism. The valve will open at a preset pressure to avoid over pressurizing the sparge wells. The pressure switches will shut down the system in the event of a high or low pressure condition. The pressure switches will be connected to the telemetry system allowing for remote monitoring of alarm conditions. The flow meter will be an averaging pitot type flow meter which will be used to monitor total air flow from the compressor. The temperature gauge will be used to monitor the temperature of the air to the sparge wells. The liquid filled pressure gauge will monitor overall air pressure in the

supply line. The ball valve will regulate flow to the manifold. The bleed valve will be used to reduce air flow and air pressure. A piping and instrumentation diagram legend is provided as Drawing P1. A diagram of the air sparge wells, process flow, and the instrumentation of the air sparge supply lines is provided as Drawing P2.

The air sparge system conveyance piping will be constructed of 1.5-inch standard dimension ratio (SDR) 11 high density polyethylene (HDPE). The air sparge manifold main header will be constructed of 2-inch diameter schedule 40 galvanized steel pipe. The individual air supply lines will be constructed of 1.5-inch schedule 40 galvanized steel, 1.5-inch diameter schedule 40 PVC, and 1.5-inch SDR 11 HDPE. Drawing P2 also shows the air sparge manifold layout and instrumentation. Drawing M2 provides details of the air sparge piping manifold.

The air sparge system will be located in the northwest portion of the existing water tank building in the South Alley area. The layout of the AS system is shown on Drawing M1.

3.0 SOIL VAPOR EXTRACTION REMEDIATION SYSTEM

The soil vapor extraction remediation system is designed to capture chlorinated volatile organic compounds in the vapor phase which have been volatilized by the air sparging activities. There were seven borings/wells completed in the western portion of the South Alley during the PDI activities. Only one of these locations exhibited VOCs in soil above ROs (SMW-5). Therefore significant concentrations of VOCs from the soils in the area aside from those liberated by the AS process are not anticipated. The SVE system is designed to remove the vapor phase VOCs generated by the air sparge process from the subsurface.

3.1 PILOT TEST REVIEW

The soil vapor extraction system design is also based upon the results of a pilot test conducted in the OSA over the period of November 17-18, 2003. As the geology is very consistent across the Site, the pilot test results are considered representative of the treatment area located in the western portion of the South Alley. The pilot test results were positive and showed that SVE is a viable technology for the capture of contaminants liberated as a result of air sparge activities. The pilot test results provided the following design parameters:

Radius of Influence – vacuum
Vapor extraction flow rate
Soil permeability to air flow

The complete SVE pilot test results can be found in the Pilot Test Summary Report dated October 1, 2004 and submitted to USEPA.

3.2 SOIL VAPOR EXTRACTION TREATMENT AREA

The six SVE wells will be divided into three banks of two wells. Each bank of two wells will act as an independent treatment cell. The SVE banks will operate sequentially in concert with the air sparge banks under the control of a timing relay and air solenoid valves. The

approximate location of the SVE treatment zone area and well locations are shown on Drawings Y4 and Y5, respectively.

3.3 SOIL VAPOR EXTRACTION SYSTEM FINAL DESIGN

The six SVE wells are based upon a design radius of influence (ROI) of 50 feet. The extrapolated ROI from the pilot test data was 60 feet. A 50 ROI was used in the design calculations as a safety factor. Actual SVE ROI may be greater due to a design vacuum of 60 inches of water (H_2O). Actual SVE ROI will be measured once the system is fully operational. Line friction losses were calculated for the SVE system and factored into the sizing of the blower.

The SVE vacuum pressure and flow rate was determined by extrapolating the results of the SVE pilot test. The pilot test achieved 76 actual cubic feet per minute (acfm) at 20 inches H_2O using a 2 hp regenerative blower. The SVE step test data was extrapolated for the remedial design. The SVE system design calculations, assumptions, and pipe friction loss calculations using the Darcy-Weisbach equation are provided in Appendix C. A larger regenerative blower capable of achieving 200 acfm at 60 inches H_2O is specified. The specified vacuum blower is a Reitschle Bora Model SAP 380, 6.4 hp regenerative, side channel blower (or equivalent). The blower specifications and performance curves are provided in Appendix D. Each cell will be pulsed for five hours initially based on the air sparge duration. The pulse time may be adjusted based upon the evaluation of the initial results.

Extraction Well Design

The extraction well design will consist of a 10 foot section of 4-inch diameter, 0.010 slot PVC well screen connected to 4-inch diameter PVC riser. The depth to groundwater in the treatment area is typically 33 feet bgs. The screened interval of the extraction well will terminate three feet above the average water table level to reduce the effect of groundwater mounding and potential masking of the extraction well screen. The exact screened interval will be determined during installation. The wells will be installed using 8-inch or larger hollow stem augers or sonic drilling technology. The filter pack will be red flint #3545 filter

sand pack (or equivalent) and will extend 12 inches above the screened interval. A 12-inch sugar sand filter collar will be placed above the filter collar. The SVE wells will be sealed using bentonite chips (or pellets) hydrated in place. The bentonite seal will extend three feet above the filter pack. Bentonite/cement grout (94% cement) will be used for the remainder of the bore hole to a depth of 42 inches bgs. At the 42 inch level, a PVC Tee will be welded to the riser and connected to the extraction line. A ball valve will be placed in line to regulate flow from the extraction well. The well head will have liquid filled vacuum gauges and sampling/monitoring ports installed. Construction diagrams for the SVE wells and well vaults are provided on Drawings Y6 and M2, respectively.

Equipment, Conveyance Piping, and Manifold

The vacuum lines coming off the main header will be equipped with the following equipment:

- Brass gate valve
- PVC ball valve
- Timer controlled solenoid valve
- Actuated make-up air valve
- 12 inch long, 2 inch diameter clear PVC sight gauge
- Liquid filled 0-80 inch H_2O vacuum gauge
- 4-20 mA output pressure transducer
- 3/8-inch brass ball valve for monitoring

The brass gate valve will control vacuum and air flow from the well. Air flow will be monitored using a self averaging pitot tube inserted into the sampling port. Velocity and static pressures will be measured with a magnehelic gauge and converted into flow rate. The PVC valve is used for gross flow and vacuum adjustments and for shutting the well off completely. The solenoid valves will open the extraction wells to vacuum based upon timer programming. The timer will be programmed to allow vacuum to each treatment cell sequentially. The liquid filled pressure gauges will provide visual monitoring of line vacuum. The pressure transducers will allow remote monitoring via telemetry of line vacuum. Using the telemetry system, the actuated make-up air valve will allow remote adjustments to line vacuum. The 3/8-inch ball valve will be used as a sampling port and flow monitoring point.

The extraction air line coming into and out of the vacuum blower will be equipped with the following:

- Vacuum relief valve
- Self averaging pitot tube
- Temperature gauge
- Liquid filled vacuum gauge
- Ball valve
- Make up air valve

The vacuum relief valve is a mechanical valve that will open at a preset pressure in the event of a high vacuum condition. The valve will open at a preset vacuum level to avoid high vacuum conditions and potentially damaging the blower. The flow meter will be an averaging pitot type flow meter which will be used to monitor total air flow from the vacuum blower effluent. The temperature gauge will be used to monitor the temperature of the vacuum blower effluent. The liquid filled pressure gauge will monitor vacuum pressure at the blower influent. The ball valve will regulate flow to the manifold. The make up air valve will be used to supply ambient air to reduce vacuum at the manifold.

The SVE system conveyance piping will be constructed of 2-inch SDR 11 HDPE. The SVE manifold main header will be constructed of 3-inch diameter schedule 40 PVC pipe and fittings. The individual vacuum lines will be constructed of 2-inch diameter schedule 40 PVC, and 2-inch SDR 11 HDPE. Drawing P2 shows the SVE system manifold layout, process flow, and instrumentation. Drawing M2 shows the details of the SVE piping manifold. The SVE system will be housed within the existing water tank building. The SVE system layout within the building is shown on Drawing M1.

3.4 AIR AND WATER SEPARATION

Entrained water vapor in the vacuum lines will be removed and collected by an air/water separator. The air/water separator specifications will be matched to the vacuum and flow rate of the regenerative blower. The air/water separator will contain automatic level controls

with redundant high-high alarms. The level controls will be housed in a stilling well attached to the side of the air/water separator. The air/water separator system will be designed to automatically gravity discharge to an air sparge well in the event of a high level condition.

4.0 EXTRACTED AIR TREATMENT AND OPERATION

4.1 VAPOR PHASE TREATMENT

The vapor phase treatment system will consist of two granular activated carbon (GAC) units, a primary and secondary unit, plumbed in series. The secondary carbon unit will act as a back up in the event VOC breakthrough occurs at the primary unit. Each unit will be a Carbonair GPC 20R containing 2,000 pounds (lbs) of GAC designed for vapor phase adsorption (or equivalent). Technical specifications of the air treatment system are provided in Appendix E. The carbon units will be connected using flexible hose and quick disconnect fittings to facilitate installation, unit change out, and removal. Air discharge sampling ports will be installed between the carbon units and at the discharge. Due to the operating nature of AS/SVE systems where there are higher initial VOC concentrations in the soil vapor that decrease with time, it is anticipated that the carbon units will be utilized primarily only during the initial phase of system operation. The carbon units will be taken off line once effluent VOC concentrations no longer exceed permit required conditions. The layout of the GAC units within the treatment building is shown on Drawing M1.

4.2 ELECTRICAL REQUIREMENTS

Calculations were performed to determine if there was a potential need to use explosion proof controls, equipment, and wiring in the equipment building. The maximum concentration of flammable VOCs in the extracted vapor stream was calculated using the groundwater data collected from monitoring wells located in the treatment area. The groundwater data used was from the November 17, 2004 sampling event. Soil VOC analytical concentrations from borings/wells samples during the PDI from within the treatment area were either below the method detection limits or at trace levels. Therefore, the anticipated maximum potential VOC vapor concentrations produced by the AS/SVE system are based upon dissolved phase groundwater concentrations only. To determine the estimated maximum potential vapor concentrations calculations were made using Henry's Law equilibrium constants to estimate the highest VOC concentrations across the treatment area. Average VOC concentrations in the extracted air were also estimated using the same method.

The results show that the maximum vapor concentration anticipated at the Site is 8,360 parts per million volume (ppmv) and over 39% of these vapors would be 1,1,1-TCA. Using this maximum vapor concentration (which is the most conservative) the highest concentration of flammable VOCs in the extracted vapors is not anticipated to exceed 11% of the lower explosive limit (LEL) for 1,1,1-TCA. Based on these calculations, explosion proof controls including equipment and wiring for the AS/SVE system at the site are not necessary. The soil vapor (flammable, maximum, and average) VOC loading calculations are provided in Appendix F.

Electrical requirements for the major components of the AS/SVE system will be as follows:

Equipment	Voltage	Horsepower	Amperage	Phase
Regenerative Vacuum Blower	230	6.4	19	3
Rotary Vane AS Blower	230	15	41	3
Solenoid Valves	120	NA	10.5	1
Controls	120	NA	10	1

The electrical distribution system will consist of a 230 volt, 200 amp, three phase, 60 Hertz service provided by the facility through a fusible disconnect. A breaker panel will be installed to provide 230 volt, three-phase power to the major electrical components of the system. An additional breaker panel will be installed to provide 230/120 volt, single-phase power for auxiliary and control systems. All electrical installations will be in accordance with the National Electric Code. The SVE blower, AS compressor, and control panel box will have the appropriate National Electrical Manufacturers Association (NEMA) rating in accordance with local building codes and ordinances. The electrical symbols legend used are shown on Drawing E1. An electrical one-line diagram of the remediation system is provided as Drawing E2.

4.3 SYSTEM CONTROLS

The AS/SVE system will contain associated safety features to protect the equipment and surroundings. The system will be designed to operate up to 24 hours per day, 365 days per

year, except for planned periodic maintenance shutdowns. The AS/SVE system will be equipped with a telemetry system which will provide notification of any system alarm condition and/or system shut down. In the event of a transient power failure, the telemetry system will allow remote system restart.

The air/water separator unit will be equipped with high level, low level, and high-high-level stainless steel conductivity probes. The probes will be installed in a stilling well located on the side of the air/water separator vessel. The purpose of the stilling well is to damper the effects of turbulence caused by vacuum on the control surfaces. The air/water separator control logic will function in the following manner. When the extracted water level in the air/water separator reaches the high-level conductivity probe, a timer relay will be activated. The timer relay will turn off the SVE blower and the AS blower for a predetermined amount of time. With the reduction in vacuum, a flapper valve will open at the bottom of the vessel and allow the condensed soil moisture to gravity discharge to an air sparge well. At the end of the timer sequence, the AS/SVE system will restart and normal operations will commence.

Air pressure switches will be installed in the air sparge system manifold. The pressure switches will monitor the discharge pressure from the air sparge blower. The switches will be set for a low pressure condition and a high pressure condition. In the event that the maximum air pressure is exceeded or the minimum air pressure is not met, the system will be shut down. The pressure switch controls will include a timer. To eliminate the effects of transient pressure conditions, the system will shut down only if the maximum or minimum pressure condition is maintained throughout the entire programmed timed interval. For example a high air pressure condition must be maintained for the duration of the timed interval (usually 30 seconds) to trigger the high pressure alarm.

A mechanical, spring operated, high vacuum pressure relief valve will be installed at the influent of the SVE vacuum blower. The vacuum relief valve will be adjustable. In the event the blower vacuum exceeds the relief valve preset maximum condition requirement, the valve will open to the atmosphere reducing the vacuum. The vacuum relief valve will be monitored by the telemetry unit and an alarm message will be sent when the relief valve is opened.

The motors for the air sparge compressor and the vacuum blower will be protected using thermal overloads on the motor starters. The thermal overloads will turn off the motors when preset amperage is exceeded. In the event of an amperage exceedance, the AS/SVE system will be completely shut down. The telemetry system will send out information concerning the shut down. For this condition the system restart will have to be performed manually. The details of the system controls are provided in the electrical one-line diagram provided as Drawing E2.

The air treatment components will be housed in the northwest portion of the firewater tank building along with the AS, SVE, and air/water separator equipment. A poured concrete floor will be constructed over the existing pea gravel floor in this part of the building. The building has exterior metal walls set on a concrete foundation wall. The water tank building has access directly to the south alley via double doors. Additional details of the equipment layout are provided on Drawing M1.

5.0 OUTSIDE CONTAINER STORAGE AREA GROUNDWATER ATTENUATION ENHANCEMENT AND SOIL EXCAVATION

A work plan entitled Outside Container Storage Area Source Material Mass Reduction Work Plan was developed based on comprehensive soil sampling completed in the OSA during the PDI activities. This document was originally prepared and submitted to the USEPA and IEPA by SECOR in April 2005. In July 2005, comments were addressed and the work plan was approved with modification in a USEPA letter dated August 2005. An updated final work plan incorporating the Agency comments and the August 2005 requested modifications was submitted as part of the Remedial Design in July 2006. Additional comments from the USEPA and IEPA have been incorporated into the work plan, which is provided in Appendix G. The plan includes a discussion of the history, objectives, and rationale for the following activities: natural attenuation enhancement; well abandonment; soil excavation; offsite hazardous waste disposal; excavation backfill; and clay cap construction. A brief overview of each of these activities is provided in this section.

5.1 NATURAL ATTENUATION ENHANCEMENT

A Regenesis® product, Hydrogen Release Compound Extended Release Formula (HRC-X), will be introduced into the groundwater underlying the OSA through the screened portion of the existing access points (wells). HRC-X is a glycerol polylactate product which slowly releases hydrogen into groundwater for an extended period of time and creates anaerobic conditions which facilitate the biodegradation process for chlorinated volatile organic compounds. Additional details regarding the use of the product are provided in Section 3.0 of Appendix G.

5.2 WELL ABANDONMENT

The 18 existing wells in the OSA will be abandoned in accordance with the Illinois Water Well Construction Code Section 920.120 after the HRC-X placement in preparation for the excavation activities. The soil vapor extraction, air sparge, vacuum monitoring, and air sparge monitoring wells or points with a depth greater than five feet will be properly

abandoned by filling the well annulus with a cement bentonite slurry installed via tremie pipe to a depth of four feet bgs. The near ground surface portion of the well risers will be removed in connection with the OSA excavation activities. The shallow wells (five feet or less in depth) will be completely removed as part of the excavation activities.

5.3 SOIL EXCAVATION ACTIVITIES

The extent of planned excavation will be the entire OSA area (65 feet by 50 feet) to the target depths identified ranging from four to six feet bgs. The clean surface pea gravel overlying the concrete pad will be stockpiled and reused. The concrete, impacted underlying gravel, and silty clay soil in the area will be excavated. The estimated volume of impacted material to be removed is 550 cubic yards or approximately 850 tons of material. The excavated material will be placed in lined container boxes with tarps or loaded directly in trucks with lined boxes and tarps.

The planned excavation area is bound immediately to the west by a public sidewalk and right of way which contains utilities, to the south by a local spur line of the Illinois Central Railroad, to the east by a grass and landscaped area, and to the north by an asphalt access road to the HS employee parking lot. Access in the form of a right of entry from the Illinois Central Railroad will need to be obtained as a portion of this area is leased. Prior to commencing the work, a public utility locate via the JULIE one call system will be made as well as a private utility locate for onsite utilities.

Additional details regarding the waste characterization, health and safety considerations, utility line location, soil excavation and loading, soil transportation, decontamination procedures, and excavation sampling are provided in Section 3.0 of Appendix G.

5.4 OFFSITE SOIL DISPOSAL

The waste will be shipped to a HS approved hazardous waste disposal facility. After preliminary disposal facility evaluation, it is likely that the waste material will be transported, treated as necessary, and disposed at the Environmental Quality Company (EQ) Michigan Disposal Waste Treatment Plant facility located in Belleville, Michigan. Upon confirmation of

final selection and waste acceptance for shipment this information will be provided to the USEPA and IEPA.

5.5 EXCAVATION BACKFILL

Clean backfill from a documented local source will be used. At a minimum, the top three feet of fill will be a clay soil. The timing and manner of backfill placement will be dictated by the actual conditions at the time of the excavation. Considerations will include such things as backfill source material availability, inspection scheduling, excavation stability, and safety. If existing infrastructure or utilities are considered vulnerable, backfill placement will be completed immediately following the excavation and sampling activities. Additional details regarding the excavation backfill are provided in Section 3.0 of Appendix G.

5.6 CLAY CAP CONSTRUCTION

The top three feet of backfill material will be clay soil. The soil will be placed in one foot lifts over the excavated area and compacted with the excavating equipment. The area will then be top dressed with suitable topsoil and seeded with grass to minimize erosion and for aesthetic purposes. There is minimal to no slope in this area, therefore additional erosion protection measures are not necessary. Additional details regarding the cap construction are provided in Section 3.0 of Appendix G. A cross section of the clay cap engineered barrier is provided as Drawing Y7.

5.7 LOADING DOCK SOIL REMEDIATION

Soil in the vicinity of borings S12 and SMW-15 will be addressed. The remedial activities will likely consist of limited excavation, pending final delineation. Soil removal would likely require abandonment of monitoring well SMW-15. The details of the remedial action will be discussed with and approved by USEPA. This area is presently paved with asphalt.

6.0 INSTITUTIONAL CONTROLS

Institutional controls in the form of deed restrictions will be implemented as part of the remedial action. These controls are imposed on the title of the property to ensure that specific requirements and prohibitions are clearly identified to current and future owners. Several different types of institutional controls will be imposed on the property. These will consist of a groundwater use restriction, which will be developed in conjunction with the establishment of a groundwater management zone, a commercial/industrial land use restriction, and the designation of an engineered barrier. The IEPA Model Environmental Land Use Control form is provided as a reference document in Appendix H. The deed restrictions will likely contain similar information. The actual format for the institutional controls will be developed by all parties at some time in the future.

6.1 GROUNDWATER USE RESTRICTION AND GROUNDWATER MANAGEMENT ZONE DEVELOPMENT

A groundwater use restriction will be imposed on the deed for the Plant # 1 facility. The restriction will prohibit the use of groundwater at the Site from being used as a potable water source and that any contaminated groundwater removed from the property will be properly managed and disposed. The designation of restricted groundwater use will be completed in conjunction with the establishment of a GMZ for Area 9/10. The GMZ application will be developed and prepared in accordance with the 35 IAC Part 620.250. The point of compliance well monitoring network for the remedial action will be developed as part of the GMZ application.

6.2 COMMERCIAL / INDUSTRIAL LAND USE RESTRICTION

A commercial/industrial land use restriction will be imposed on the deed of the HS Plant # 1 property. This action will prohibit use of the property for residential purposes.

6.3 ENGINEERED BARRIER DESIGNATION

The clay cap to be constructed at the ground surface upon completion of the OSA excavation activities will be designated as an engineered barrier. The barrier will be identified and management systems put into place such that excavation or other facility operations will provide for the integrity of the clay cap. If excavation is required in the future within the boundaries of this area, specific safety precautions will need to be followed and the integrity of the cap restored upon completion of those activities. The condition of the engineered barrier will be periodically inspected and necessary maintenance activities performed to restore the condition of the barrier such that the integrity of the barrier can be certified.

7.0 APPLICABLE OR RELEVANT AND APPROPRIATE REQUIREMENTS

The remedies for the ROD are subject to federal Applicable or Relevant and Appropriate Requirements (ARARs) and any more stringent state regulations that the remedial technologies must achieve. The ARARs have been identified in accordance with Section 121(d) (2) of the Comprehensive Environmental Response, Compensation, and Liability Act (CERCLA), as amended by the Superfund Amendments and Reauthorization Act (SARA) of 1986, and the Small Business Liability Relief and Brownfields Revitalization Act of 2002. These ARARs are also consistent with the National Contingency Plan (NCP) 40 Code of Federal Regulations (CFR) Part 300; amended March 8, 1990.

It is important to note that, as identified at Section 121(e) of CERCLA, and in the NCP at 40 CFR 300.400(e), no federal, state, or local permits are required for any remedial actions conducted entirely on-site. However, on-site emissions and/or discharges need to attain a level of treatment and management meeting all substantive technical requirements that may be required if a permit were necessary. Emissions or discharges that leave the site or response actions that are conducted off-site are subject to applicable permitting requirements.

The status of a requirement under Section 121(d) of CERCLA and other environmental laws, both federal and state, may be either applicable or relevant and appropriate to the remedial alternative, but not both. The NCP (40 CFR 300.5) definitions of these terms are provided in the sections that follow.

7.1 APPLICABLE REQUIREMENTS

Applicable requirements are those clean-up standards, standards of control, and other substantive requirements, criteria, or limitations promulgated under federal or state environmental or facility siting laws that specifically address a hazardous substance, pollutant, contaminant, remedial action, location, or other circumstance found at a CERCLA site. Only those state standards more stringent than federal requirements may be applicable.

7.2 RELEVANT OR APPROPRIATE REQUIREMENTS

Those clean-up standards, standards of control and other substantive requirements, criteria or limitations described above, that, while not applicable, address problems or situations sufficiently similar to those encountered at a CERCLA site that their use is well suited to the particular site.

In addition to ARARs, federal and state non-promulgated criteria, advisories and guidance may exist as requirements to be considered (TBC). Requirements TBC may be used, as appropriate, in developing clean-up standards. However, requirements TBC do not have the same status as ARARs because they are not promulgated regulations.

7.3 OTHER REQUIREMENTS TO BE CONSIDERED (TBCs) AND ARAR ALTERNATIVES

Federal and state advisories or guidance documents that are not promulgated regulations do not have status as ARARs, however they may be considered in determining the necessary level of cleanup for the protection of health or the environment.

Also a remedial alternative that does not meet an ARAR under federal or state environmental laws can still be selected given any of the following six limited circumstances as specified in 40 CFR 300.430(f) (1) (ii) (C) (1)-(6):

- The alternative is an interim measure and will become part of a total remedial action that will attain the applicable or relevant and appropriate federal or state requirement;
- Compliance with the requirement will result in greater risk to human health and the environment than other alternatives;
- Compliance with the requirement is technically impracticable from an engineering perspective (e.g., technical impracticability waiver for groundwater);
- The alternative will attain a standard or performance that is equivalent to that required under an otherwise applicable standard, requirement, or limitation through the use of another method or approach; and

- With respect to a state requirement, the state has not consistently applied, or demonstrated the intention to consistently apply, the promulgated requirement in similar circumstances at other remedial actions within the state.

7.4 TYPE OF ARARs

There are three types of ARARs: chemical specific; location specific; and action specific. The ARAR types are based on the factors that trigger the requirement. These types of ARARs are defined as follows:

- Chemical Specific Requirements are set health or risk-based concentration limits or ranges in various environmental media for specific hazardous substances, pollutants or contaminants that are acceptable in the ambient environment.

- Location Specific Requirements are set restrictions on activities, depending on the characteristics of a site or its immediate receptors. A remedial alternative may be restricted or eliminated due to the location or characteristics of the site and the requirements that apply to it.

- Action Specific Requirements are set controls or restrictions on particular kinds of activities related to the management of hazardous substances, pollutants or contaminants. These requirements are not triggered by specific chemicals at a site, but rather by the particular activities to be conducted during the implementation of the remedial action.

Only chemical specific ARARs are candidates for site cleanup goals. Action specific and location-specific ARARs apply to the execution of the remedial action.

Listed below are the federal and state regulations that are either applicable or relevant and appropriate requirements for the SER Site:

Federal ARARs:

- CERCLA, including SARA of 1986, the Small Business Liability Relief and Brownfields Revitalization Act of 2002 and subsequent amendments;
- Resource Conservation and Recovery Act of 1996, as amended;
- Hazardous and Solid Waste Act (HSWA) Amendments of 1984;
- The Clean Water Act (CWA) and Amendments;
- The Safe Drinking Water Act (SDWA);
- The Clean Air Act (CAA);
- The National Environmental Policy Act of 1969 (NEPA); and
- The Hazardous Materials Transportation Act.

State ARARs:

- Illinois Environmental Protection Act;
- Illinois Solid Waste Management Rules;
- Illinois Air Pollution Control Regulations; and
- Illinois Groundwater Protection Act.

7.5 IDENTIFIED FEDERAL AND STATE ARARS

A summary of the Federal and State SER Site specific ARARs based on those identified in the ROD are provided in Table 7.1.

8.0 MINIMIZATION OF IMPACTS

The remedial design has incorporated a number of factors to ensure minimization of impacts to the public and the environment. These include minimizing the public sensory perception of the remedial activities, reducing the potential for public nuisance conditions, and reducing the overall energy requirements for the remedial action construction and operation. In the sections below are listed specific items that have been incorporated into the design.

8.1 MINIMIZED PUBLIC IMPACTS

The AS/SVE and air treatment equipment will be housed in the water tank building rather than constructing an additional building that would further reduce the open area on the property and may not be as visually aesthetic as just two buildings along the South Alley. Sound proofing will be incorporated into the building, as necessary, to avoid potential noise issues. GAC will be used to reduce air emission levels to below the 8 lbs/hour level which triggers permit requirements.

8.2 MINIMIZED ENVIRONMENTAL IMPACTS AND SUSTAINABLE DESIGN

A number of sustainable design, energy efficiency, and conservation principles that have been incorporated into the remedial design to date or are planned include but are not limited to:

- Modification of an existing structure rather than building new;
- Requesting contractors to use recycled materials (where possible and appropriate);
- Returning SVE condensate water to the subsurface;
- Efficient piping layout, effective piping size specification, and material selection;
- Evaluation of piping design to minimize friction loss and energy consumption;
- Implementing a cell approach to the treatment system to reduce necessary equipment size and associated energy consumption;
- Reuse of excavated trench material as backfill (as possible); and
- Request asphalt to be recycled by contractor.

During implementation an effort will be made to identify other opportunities to reduce the environmental footprint of the remedial action.

9.0 PERMITS

The activities to be undertaken in the implementation of the remedial design involve actions that may require permits, however, as noted in Section 7.0, for any remedial action conducted entirely on-site, federal, state, and local permits are not required. Discussed below are the on-site actions that are subject to permit requirements, although a permit will not be required, and those actions that will not be conducted entirely on-site and require obtaining a permit.

9.1 ACTIONS SUBJECT TO PERMIT REQUIREMENTS

The following activities will be completed entirely on-site and therefore are subject to permit requirements although permits will not need to be obtained:

- Treatment system equipment area construction within the water tank building and associated craft work – subject to local permits and ordinances
- Asphalt paving work – subject to local permits and ordinances
- Return of condensate water to the aquifer through an air sparge point – subject to Class V injection permit requirements
- Placement of HRC-X into the wells in the OSA - subject to Class V injection permit requirements
- SVE air emissions – subject to air permit treatment requirements if over 8 lbs per hour total volatile emissions (also subject to the facility FESOP requirements)

9.2 PERMITS REQUIRED

Soil and water from the OSA excavation activities will involve the transportation and disposal of material offsite. Similarly impacted soil at depth associated with the installation of the AS/SVE system will require offsite disposal. There will also be liquid wastes generated associated with the monitoring well network and periodic groundwater monitoring activities. Disposal of all of these wastes will require permits, permitted contractor operations, or proper authorization.

As part of the remedial design, a groundwater management zone application has been prepared and submitted. The GMZ application for the Site completed in conjunction with the RD submittal process is a separate, stand alone document.

10.0 CONTENT OF FINAL DESIGN

The purpose of the final design (100% Design) report is to present the USEPA with the basis of design for the groundwater and soil remedy at the SER Site. This document incorporates comments on the pre-final design in the final design package for the Site.

The 100% design report includes the following items:

- 100% design drawings;
- technical specifications;
- final amended health & safety plan;
- final operation, monitoring, and maintenance plan; and
- final construction quality assurance project plan.

The contents for submittal of these items are discussed in the following subsections. As mentioned in Section 9.2 a GMZ application has been prepared and submitted to the Agency for approval as part of the remedial design effort. This application was made as a separate, stand alone document apart from the design submittals.

10.1 FINAL DESIGN 100% DESIGN DRAWINGS

The Final Design (100% Design) drawing package has been developed to guide the construction activities at the site. These design drawings incorporate modified drawings presented in the 95% pre-final design package. The final drawing package consists of:

- Cover sheet and site location map;
- Utility and property ownership map;
- Well locations and ground surface elevations;
- Groundwater and soil remediation areas;
- Well construction details;
- Clay Cap Engineered Barrier details;
- AS and SVE system plans and details;
- Equipment layout plan and details;

- Treatment system plan and details;
- AS, SVE, and air treatment piping and instrumentation diagrams; and
- Electrical line diagrams.

The Final Design (100% Design) documents have been certified by a Professional Engineer licensed in the State of Illinois.

10.2 TECHNICAL SPECIFICATIONS

Technical specifications, which will be used to construct the remediation system, have been prepared to describe the materials, equipment, performance standards, and procedures. The purpose of the technical specifications is to describe the materials a selected contractor must provide and install and identify specific management, administrative, and reporting requirements for work completion to the satisfaction of HS.

The technical specifications are formatted in accordance with the Construction Specifications Institute (CSI) in Masterformat™ 2004.

10.3 AMENDED HEALTH AND SAFETY PLAN

The Health and Safety Plan (HASP) for the SER Site has been updated and amended to incorporate the additional activities to be undertaken for the installation and construction of the remedial system infrastructure and the operation and maintenance of the system.

10.4 OPERATION, MAINTENANCE, AND MONITORING PLAN

The operation, monitoring, and maintenance plan incorporates a variety of activities at the site. These include site security, groundwater monitoring, engineered barrier (OSA clay cap) monitoring and maintenance, and treatment system operation, monitoring and maintenance.

The groundwater monitoring portion of the plan establishes a monitoring well network and plan for monitoring the water table, intermediate, and deep aquifer at the site. The plan will

also identify performance criteria that will trigger continuous operation, pulsed operation, or system shutdown.

The engineered barrier monitoring and maintenance portion of the plan includes scheduled inspections of the area and identifies contingencies for breaches in the cap integrity, erosion control, and seeding.

The treatment system operations, monitoring, and maintenance portion of the plan includes sequence of operations, electrical controls, and equipment descriptions for the mechanical portions of the system. In addition, electrical diagrams and equipment cut sheets are attached.

10.5 CONSTRUCTION QUALITY ASSURANCE PROJECT PLAN

The construction quality assurance project plan (CQAPP) provides testing procedures and frequency for backfill materials including imported soil, soil placement, asphalt paving, concrete floor construction, and other construction activities.

TABLES

TABLE 7.1
Summary of ARARs
Southeast Rockford Groundwater Superfund Site
Area 9/10
Rockford, Illinois

Act/Regulation	Federal or State	Type of ARAR	Parameter/ Program	Description
Chemical Specific				
CAA(1)	F	Chemical	Air emission	Sets regs. On national primary and secondary air quality standards
CWA(2)	F/S	Chemical	Water quality	Establishes water quality standards
Air - Pollution Control Board (8)	S	Chemical	Air permits and provisions	Lists provisions for new sources requiring permits
Air - Pollution Control Board (9)	S	Chemical	Air permits and provisions	Defines emission sources and sets limitations
Air - Pollution Control Board (10)	S	Chemical	Air permits and provisions	Sets air quality standards and measurement methods for lead, CO, nitrogen and sulfur oxides
Air - Pollution Control Board (11)	S	Chemical	Air permits and general provisions	Sets provisions and procedures for id. and evaluating toxic air contaminants
Air - Pollution Control Board (12)	S	Chemical	Air emissions	VOM emissions limited to <20 ppm
Air - Pollution Control Board (13)	S	Chemical	Air emissions	CO emissions from incinerators limited to <500 ppm
CAA (1)	F	Chemical	VC	VC emissions limited to <10 ppm
Public Water Supplies Poll. Control Board (20)	S	Chemical	Primary Drinking Water Standards	MCLs, primary drinking water standards, analytical requirements
Public Water Supplies Poll. Control Board (19)	S	Chemical	Illinois Groundwater Quality	Illinois groundwater quality standards, class designations
SDWA (3)	F	Chemical	MCLs	Sets MCLs for public drinking water
RCRA (5)	F/S	Chemical	Solid Waste	Sets criteria for identifying haz. waste
RCRA (4)	F/S	Chemical	Solid waste	Sets treatment standards for waste extract incl. hazardous waste
RCRA (6)	F/S	Chemical	Solid Waste	Identifies charac. of haz. waste
RCRA (7)	F/S	Chemical	Solid Waste	List of haz.waste from sources
Waste Disposal - Pollution Control Board (76)	S	Chemical	Solid waste and special waste hauling	Solid waste permitting, san. landfill closure and post-closure, and waste classification
Waste Disposal - Pollution Control Board (16)	S	Chemical	Hazardous waste landfill disposal	Describes haz. waste restrictions on halogenated solvents and liquid wastes
Waste Disposal - Pollution Control Board (17)	S	Chemical	Hazardous waste lists and criteria	Solid waste permitting, sanitary landfills, closure & post closure care, and special waste classifications
Waste Disposal - Pollution Control Board (14)	S	Chemical	Hazardous waste lists and criteria	Identifying and listing hazardous waste (includes PCB wastes under TSCA)
Waste Disposal - Pollution Control Board (15)	S	Chemical	Hazardous waste landfill disposal	Defines landfill waste disposal restrictions, treatment standards and prohibitions

ARAR list and footnotes are from the SER OU3 ROD dated 6/11/02
Non-shaded cells identify ARARs that are likely to apply to the SER Site (shaded cells are not anticipated to apply)
(63) See additional regulation details in Footnotes

TABLE 7.1
Summary of ARARs
Southeast Rockford Groundwater Superfund Site
Area 9/10
Rockford, Illinois

Act/Regulation	Federal or State	Type of ARAR	Parameter/ Program	Description
Water - Pollution Control Board (19)	S	Chemical	Effluent Standards	General and temp. effluent standards incl. NPDES
Water - Pollution Control Board (18)	S	Chemical	Water Quality Standards	Water quality criteria, public and food processing water supply
Location Specific				
CWA (22)	F	Location/Action	Wetland dredge and fill permits	Requires no wetland alteration if practical alternative available
Air - Pollution Control Board (30)	S	Location	Air emissions standards	Distinguishes air emissions standards for Chicago and Metro East Area
Air - Pollution Control Board (29)	S	Location	Construction permitting	Application for construction and operating premits including review
Fish and Wildlife Coordination Act (23)	F	Location	Water body modification	Any federal agency must consult U.S. Fish and Wildlife prior to water body modification
Flood Control Act (27)	F	Location	Flood plain construction	Req. approval for any construction in floodway outside Superfund boundary
NEPA(25)	F	Location	Floodplain Management	Req. fed. agencies to mitigate flooding and preserve flood plains
NEPA(24)	F	Location	Protection of Wetlands	Requires federal agencies to minimize degradation and preserve wetlands
RCRA(27)	F/S	Location	100 year floodplain	Controls type of construction in 100 year floodplain
Waste Disposal - Pollution Control Board (31)	S	Location	RCRA permit	RCRA permit application rules, applicability and information
Water - Pollution Control Board (33)	S	Location	NPDES and water related permitting	Includes NPDES permit provisions and other water related permitting
Water - Pollution Control Board (32)	S	Location	Water use and site specific standards	Establishes site specific water quality standards in Illinois
Action Specific				
Air Pollution Emission Control Regs. (63)	S	Action	Air emission	Permit required for all emissions. Requires control of off-gas if emission > 8 lbs/hr
Air - Pollution Control Board (64)	S	Action	Air emission	No person shall cause or threaten or allow the discharge or emission of any contaminant
Air - Pollution Control Board (65)	S	Action	Air emission	Regulates particulate matter emissions
CWA(50)	F/S	Action	NPDES	Discharge permit required (to Rock River)
CWA/RCRA (49-51)	F/S	Action	POTW	Regulates discharge to POTW
CWA(49)	F	Action	NPDES	POTW pre-treatment standards relating to Superfund site leachate

ARAR list and footnotes are from the SER OU3 ROD dated 6/11/02
Non-shaded cells identify ARARs that are likely to apply to the SER Site (shaded cells are not anticipated to apply)
(63) See additional regulation details in Footnotes

TABLE 7.1
Summary of ARARs
Southeast Rockford Groundwater Superfund Site
Area 9/10
Rockford, Illinois

Act/Regulation	Federal or State	Type of ARAR	Parameter/ Program	Description
CWA(56)	F	Action	NPDES	Establishes Water Quality Based Effluent Limitations
CWA(50)	F	Action	National pre-treatment standards	Discharge to POTW restrictions
CWA(51)	F/S	Action	National pre-treatment standards	National pre-treatment program requirements for POTWs
CAA(34)	F	Action	Air quality	Sets max. primary and secondary 24-hour particulate concentrations
CWA(52)	F/S	Action	NPDES	Permit must include proposed action and list all other permits
CWA(53)	F/S	Action	NPDES	Establish standards, limitations and other conditions
CWA(54)	F	Action	NPDES	BAT for toxic and non-conventional wastewater or BCT for conventional
CWA(61)	F	Action	Env. sampling	Requires adherence to sample preservation, container type, and holding times
CWA(56)	F/S	Action	NPDES	Effluent limitations and standards; permit requirements for discharge to storm sewer
CWA(57)	F/S	Action	NPDES	Establish discharge limits for toxins exceeding BAT/BCT standards
CWA(60)	F/S	Action	Surface water	States granted enforcement jurisdiction over discharges to surface waters
CWA(58)	F/S	Action	NPDES	Requires monitoring to ensure compliance
DOT(36)	F	Action	Haz. mat. transportation	Procedures for packaging, labeling and transportation of hazardous materials
Fish and Wildlife Coordination Act(62)	F	Action	Surface Water	Any fed. agency must consult U.S. Fish and Wildlife if a surface water body is modified
Noise Control Act(37)	F	Action	Construction noise emission standards	Sets standards for construction noise emissions
Protection of Archeological Resources(38)	F	Action	Archeological resource protection	Procedures for archeological resource protection
RCRA	F/S	Action	UIC	Regulates injection of groundwater
RCRA(48)	F/S	Action	T & D standards	Interim storage or treatment of haz. waste in containment buildings
RCRA(47)	F/S	Action	T & D standards - haz. waste storage	Standards for haz. waste storage in containers, surface impoundments and landfills
RCRA(46)	F/S	Action	T & D standards	Requirements for closure and post-closure of haz. waste facilities
RCRA(45)	F/S	Action	T & D standards - groundwater	Requirements for groundwater monitoring program

ARAR list and footnotes are from the SER OU3 ROD dated 6/11/02
Non-shaded cells identify ARARs that are likely to apply to the SER Site (shaded cells are not anticipated to apply)
(63) See additional regulation details in Footnotes

TABLE 7.1
Summary of ARARs
Southeast Rockford Groundwater Superfund Site
Area 9/10
Rockford, Illinois

Act/Regulation	Federal or State	Type of ARAR	Parameter/ Program	Description
RCRA(44)	F/S	Action	T & D standards	Sets standards for T & D facility storage and treatment, design, emergency and preparedness plans
RCRA(43)	F/S	Action	UST regs.	Sets requirements for UST closure
RCRA(42)	F/S	Action	RCRA land disposal restriction	Defines haz. waste debris and applies to wastes disposed off-site
RCRA(41)	F/S	Action	T & D standards	Sets requirements for haz. waste man. unit closure
RCRA(40)	F/S	Action	Haz.waste transport and disposal (T & D)	Sets standards for haz. waste generators and transporters
RCRA(39)	F/S	Action	Land disposal of solid waste	Solid, nonhaz. remediation derived waste disposal procedures
UIC Regulations (72 - 74)	S	Action	UIC	Permit and controls required
Illinois Groundwater Protection Act (79)	S	Action/ Chemical	Groundwater	Establishes groundwater management zones
RCRA (69)	F/S	Action/ Chemical	Spent Carbon	Manifest/Transport/Regenerate Spent Carbon

ARAR list and footnotes are from the SER OU3 ROD dated 6/11/02
Non-shaded cells identify ARARs that are likely to apply to the SER Site (shaded cells are not anticipated to apply)
(63) See additional regulation details in Footnotes

TABLE 7.1
Summary of ARARs - Footnotes
Southeast Rockford Groundwater Contamination Superfund Site
Rockford, Illinois

CHEMICAL SPECIFIC REQUIREMENTS

Federal

(1)Clean Air Act (42 U.S.C. §§ 7401 et seq.), National Primary and Secondary Ambient Air Quality Standards (40 CFR 50), U.S. EPA regulations on National Primary and Secondary Ambient Air Quality Standards.

(2)Clean Water Act (33 U.S.C. §§ 1251 et seq.), Water Quality Standards (40 CFR 131), U.S. EPA regulations on establishing water quality standards.

(3)Safe Drinking Water Act (42 U.S.C. §§ 300f et seq.), Maximum Contaminant Levels (40 CFR 141.11-141.16), sets standards for contaminants in public drinking water supplies.

(4)Solid Waste Disposal Act, as amended (42 U.S.C. §§ 6901 et seq.), Land Disposal Restrictions (40 CFR 268) Subpart D, Treatment Standards, sets the treatment standards for waste extract, specified technology and hazardous waste debris.

(5)Solid Waste Disposal Act, (42 U.S.C. §§ 6901 et seq.), Identification and Listing of Hazardous Waste (40 CFR 261) Subpart B, Criteria for Identifying the Characteristics of Hazardous Waste and for Listing Hazardous Waste, sets criteria for identifying a hazardous waste.

(6)Solid Waste Disposal Act, (42 U.S.C. §§ 6901 et seq.), Identification and Listing of Hazardous Waste (40 CFR 261) Subpart C, Characteristics of Hazardous Waste, identifies the characteristics of a hazardous waste.

(7)Solid Waste Disposal Act, (42 U.S.C. §§ 6901 et seq.), Identification and Listing of Hazardous Waste (40 CFR 261) Subpart D, List of Hazardous Waste, list of hazardous waste from sources.

State

(8)Air — Illinois Environmental Protection Act, Section 9 (415 ILCS 5/9), Pollution Control Board (Title 35), Subtitle B - Subchapter A, Part 201: Permits and General Provisions, lists general provisions for new sources requiring permitting. Exemptions from permit requirement are also given.

(9)Air - Illinois Environmental Protection Act, Section 9 (415 ILCS 5/9), Pollution Control Board (Title 35), Subtitle B - Subchapter C Emission Standards and Limitations for Stationary Sources, Part 211: Definitions and General Provisions, defines emission sources and related items; Part 212 Visible and Particulate Matter Emissions sets emission limitations for particulate matter for a variety of operations, i.e., incinerators or waste storage piles. Also see Parts 214- 219, which gives information regarding specific types of emissions per operation e.g., sulfur, organic material, carbon monoxide and nitrogen oxide emissions.

(10)Air - Illinois Environmental Protection Act, Section 9 (415 ILCS 5/9), Pollution Control Board (Title 35), Subtitle B - Subchapter L, Part 243: Air Quality Standards, sets air quality standards and measurement methods for PM-10, particulates, sulfur oxides, carbon monoxide, nitrogen oxides, ozone and lead.

(11)Air - Illinois Environmental Protection Act, Section 9 (415 ILCS 5/9), Pollution Control Board (Title 35), Subtitle B - Subchapter F, Part 232: Toxic Air Contaminants, sets provisions and procedures for identifying and evaluating toxic air contaminants; exceptions are also given here.

TABLE 7.1
Summary of ARARs - Footnotes
Southeast Rockford Groundwater Contamination Superfund Site
Rockford, Illinois

(12)Air - Illinois Environmental Protection Act, Section 9 (415 ILCS 5/9), Pollution Control Board (Title 35), Subtitle B — Air Pollution, Part 215: Organic Material Emissions Standards and Limitations, sets emission standards for volatile organic material for a variety of operations.

(13)Air - Illinois Environmental Protection Act, Section 9 (415 ILCS 5/9), Pollution Control Board (Title 35), Subtitle B — Air Pollution, Part 216: Carbon Monoxide Emissions, sets emission standards for carbon monoxide for a variety of operations.

(14)Waste Disposal - Illinois Environmental Protection Act, Section 21 (415 ILCS 5/21), Pollution Control Board (Title 35), Subtitle G - Subchapter C: Hazardous Waste Operating Requirements, Part 721: Identification of Listing of Hazardous Waste, includes PCB wastes regulated under TSCA, universal wastes, criteria for identifying and listing hazardous waste, and lists of hazardous waste.

(15)Waste Disposal - Illinois Environmental Protection Act, Section 21 (415 ILCS 5/21), Pollution Control Board (Title 35), Subtitle G - Subchapter C: Hazardous Waste Operating Requirements, Part 728: Land Disposal Restrictions, defines land disposal restrictions for wastes, waste specific prohibitions, treatment standards, and prohibitions on storage.

(16)Waste Disposal - Illinois Environmental Protection Act, Section 21 (415 ILCS 5/21), Pollution Control Board (Title 35), Subtitle G - Subchapter C: Hazardous Waste Operating Requirements, Part 729: Prohibited Hazardous Wastes in Land Disposal Units, describes general hazardous waste restrictions and restrictions on halogenated solvents and liquid hazardous wastes in landfills.

(17)Waste Disposal - Illinois Environmental Protection Act, Section 21 (15 ILCS 5/21), Pollution Control Board (Title 35), Subtitle G - Subchapter I: Solid Waste and Special Waste Hauling, Part 807 includes information on solid waste permitting, sanitary landfills and closure and post- closure care; Part 808 includes information on special waste classifications.

(18)Water - Illinois Environmental Protection Act, Section 12 (415 ILCS 5/12), Pollution Control Board (Title 35), Subtitle C - Part 302: Water Quality Standards, provisions and water quality standards for general use, public and food processing water supply, secondary contact and indigenous aquatic life and Lake Michigan. Procedures for determining Water Quality Criteria are also in this Part.

(19)Water - Illinois Environmental Protection Act, Section 12 (415 ILCS 5/12), Pollution Control Board (Title 35), Subtitle C - Part 304: Effluent Standards, general and temporary effluent standards including NPDES effluent standards.

(20)Public Water Supplies - Illinois Environmental Protection Act, Section 14 (415 ILCS 5/14), Pollution Control Board (Title 35), Subtitle F - Part 611: Primary Drinking Water Standards, includes provisions of the primary drinking water standards as well as maximum contaminant levels (MCLs)/goals, and analytical requirements.

(21)Public Water Supplies - Illinois Environmental Protection Act, Section 14 (415 ILCS 5/14), Pollution Control Board (Title 35), Subtitle F - Part 620: Groundwater Quality, includes Illinois groundwater quality standards as well as definition of groundwater class designations.

TABLE 7.1
Summary of ARARs - Footnotes
Southeast Rockford Groundwater Contamination Superfund Site
Rockford, Illinois

LOCATION-SPECIFIC REQUIREMENTS

Federal

(22) Clean Water Act, (33 U.S.C. §§ 1251 et seq.), Permits for Dredge or Fill Material (Section 404), requires that no activity that adversely affects a wetlands shall be permitted if a practicable alternative that has less effect is available.

(23) Fish and Wildlife Coordination Act (16 U.S.C. §§ 661 et seq.), requires that any federal agency that proposes to modify a body of water must consult U. S. Fish and Wildlife Services.

(24) National Environmental Policy Act (42 U.S.C. § 4321) Executive Order 11990, Protection of Wetlands, requires federal agencies to minimize the destruction, loss, or degradation of Wetlands and preserve.

(25) National Environmental Policy Act (42 U.S.C. § 4321) Executive Order 11988, Floodplain Management, requires federal agencies to reduce the risk of flood loss, to minimize impact of floods, and to restore and preserve the natural and beneficial value of flood plains.

(26) National Environmental Policy Act (42 U.S.C. § 4321) Statement of Procedures on Floodplain Management and Wetland Protection (40 CFR 6) Appendix A to Part 6, promulgates Executive Orders 11988 and 11990 regarding wetlands and flood plains.

State

(27) Flood Control Act (ILCS 14-28-1), requires formal approval for any construction, excavation or filling in the floodway outside of the Superfund boundary.

(28) Water Resources Management Act (ILCS-14-25-7), requires registration of any significant water withdrawal facility with the Department of Natural Resources. A significant water withdrawal facility is defined as any water withdrawal facility that, in the aggregate from all sources and by all methods, has the capacity to withdraw more than 100,000 gallons of groundwater or surface water or a combination of the two in one day. This would also include any potable pumps employed by the facility.

(29) Air - Illinois Environmental Protection Act, Section 9 (415 ILCS 5/9), Pollution Control Board (Title 35), Subtitle B - Subchapter A, Part 201, Subpart D: Permit Application and Review Process, describes contents of the application for construction and operating permits and the review process.

(30) Air - Illinois Environmental Protection Act, Section 9 (415 ILCS 5/9), Pollution Control Board (Title 35), Subtitle B - Subchapter C Emission Standards and Limitations for Stationary Sources, Part 218: Organic Material Emission Standards and Limitations for the Chicago Area; Part 219: Organic Material Emission Standards for the Metro East Area, distinguishes emission standards for the Chicago Area and the Metro East Area - see detailed regulation for applicability to the S. E. Rockford site.

(31) Waste Disposal - Illinois Environmental Protection Act, Section 21 (415 ILCS 5/21), Pollution Control Board (Title 35), Subtitle G - Subchapter B: Permits, Part 703: RCRA Permit Program, rules on application for and issuance of RCRA permits; applicability and information requirements.

(32) Water - Illinois Environmental Protection Act, Section 12 (415 ILCS 5/12), Pollution Control Board (Title 35), Subtitle C - Part 303: Water Use Designations and Site Specific Water Quality Standards, provisions and site specific water quality standards for water bodies throughout Illinois.

TABLE 7.1
Summary of ARARs - Footnotes
Southeast Rockford Groundwater Contamination Superfund Site
Rockford, Illinois

(33) Water - Illinois Environmental Protection Act, Section 12 (415 ILCS 5/12), Pollution Control Board (Title 35), Subtitle C - Part 309: Permits, Subpart A includes provisions for NPDES permits and Subpart B includes provisions for all other water related permitting.

ACTION-SPECIFIC REQUIREMENTS

Federal

(34) Clean Air Act, (42 U.S.C. §§ 7401 et seq.), National Primary and Secondary Ambient Air Quality Standards (40 CFR Part 50), specifies maximum primary and secondary 24-hour concentrations for particulate matter.

(35) Clean Water Act, (33 U.S.C. §§ 1251 et seq.), Permits for Dredge or Fill Material (Section 404), provides requirements for discharges of dredged or fill material. Under this requirement, no activity that affects a wetland shall be permitted if a practicable alternative that has less impact on the wetland is available. If there is no other practicable alternative impacts must be mitigated. A Section 401 water quality certification may be required from Illinois EPA if wetlands or other waters of the state are impacted.

(36) Department of Transportation Rules for Transportation of Hazardous Materials, (49 CFR Parts 107, 171.1-171.5), outlines procedures for the packaging, labeling, and transporting of hazardous materials.

(37) Noise Control Act, as amended (42 U.S.C. §§ 4901 et seq.); Noise Pollution and Abatement Act (40 U.S.C. §§ 7641 et seq.), Noise Emission Standards for Construction Equipment (40 CFR 204), the public must be protected from noise that jeopardizes health and welfare.

(38) Protection of Archeological Resources (32 CFR Part 229, 229.4; 43 CFR Parts 107, 171.1-171.5), develops procedures for the protection of archeological resources.

(39) Solid Waste Disposal Act, as amended (42 U.S.C. §§ 6901 et seq.), Guideline for the Land Disposal of Solid Wastes (40 CFR 241), Part B - Requirements and Recommended Procedures, solid, nonhazardous wastes generated as a result of remediation must be managed in accordance with federal and state regulations; this is applicable to waste generated by the remedial action.

(40) Solid Waste Disposal Act, as amended (42 U.S.C. §§ 6901 et seq.), Standards for Hazardous Waste Generators (40 CFR 262) and Standards for Hazardous Waste Transporters (40 CFR 263); general requirements for packaging, labeling, marking, and manifesting hazardous wastes for temporary storage and transportation offsite. Any residues determined to be RCRA hazardous waste destined for offsite disposal are subject to manifest requirements. Remedial actions involving offsite disposal of RCRA listed wastes will be subject to this requirement.

(41) Solid Waste Disposal Act, as amended (42 U.S.C. §§ 6901 et seq.), Interim Status Standards for Owners and Operators of Hazardous Waste Treatment Storage and Disposal Facilities (40 CFR 265), Storage, and Disposal General Facility Standards, Subpart G, Closure and Post-closure, sets general requirements for closure of interim status hazardous waste management units.

(42) Solid Waste Disposal Act, as amended (42 U.S.C. §§ 6901 et seq.), Land Disposal Restriction- RCRA (40 CFR 268), RCRA Land Disposal Restriction, defines hazardous waste debris. This requirement is applicable to those RCRA hazardous wastes that will be disposed offsite.

TABLE 7.1
Summary of ARARs - Footnotes
Southeast Rockford Groundwater Contamination Superfund Site
Rockford, Illinois

(43) Solid Waste Disposal Act, as amended (42 U.S.C. §§ 6901 et seq.), Technical Standards and Corrective Action Requirements for Owners and Operators of Underground Storage Tanks (40 CFR 280), Subpart G, Out- of- Service UST Systems and Closure, sets requirements for temporary and permanent UST closure, and assessing the site closure.

(44) Solid Waste Disposal Act, as amended (42 U.S.C. §§ 6901 et seq.), Standards for Owners and Operators of Hazardous Waste Treatment Storage, and Disposal Facilities (40 CFR 264), Subpart B, General Facility Standards; Subpart C, Preparedness and Prevention; Subpart D, Contingency Plan and Emergency Procedures; Subpart E, Manifest System, Record Keeping and Reporting, establishes general requirements for storage and treatment facility location, design and inspection, waste compatibility determination, emergency contingency plans, preparedness plans, and worker training.

(45) Solid Waste Disposal Act, as amended (42 U.S.C. §§ 6901 et seq.), Standards for Owners and Operators of Hazardous Waste Treatment, Storage, and Disposal Facilities (40 CFR 264) Subpart F, Releases from Solid Waste Management Units, details requirements for a groundwater monitoring program to be installed at the site.

(46) Solid Waste Disposal Act, as amended (42 U.S.C. §§ 6901 et seq.), Standards for Owners and Operators of Hazardous Waste Treatment, Storage, and Disposal Facilities (40 CFR 264) Subpart G, Closure and Post-Closure, defines specific requirements for closure and post-closure of hazardous waste facilities.

(47) Solid Waste Disposal Act, as amended (42 U.S.C. §§ 6901 et seq.), Standards for Owners and Operators of Hazardous Waste Treatment, Storage, and Disposal Facilities (40 CFR 264), Subpart I, Use and Management of Containers; Subpart J, Tank Systems; Subpart K, Surface Impoundments; Subpart L, Waste Piles; and Subpart N, Landfills. Containers, surface impoundments, and landfills used to store hazardous waste must be closed and in good condition. Tank systems must be adequately designed and have sufficient structural strength and compatibility with the wastes to be stored or treated to ensure that it will not collapse, rupture, or fail, including secondary containment. Waste piles must be designed to prevent migration of wastes out of the pile into adjacent subsurface soil or groundwater or surface water at any time during its active life. Disposal of special wastes in landfills must be done in accordance with requirements.

(48) Solid Waste Disposal Act, as amended (42 U.S.C. §§ 6901 et seq.), Standards for Owners and Operators of Hazardous Waste Treatment, Storage, and Disposal Facilities (40 CFR 264), Subpart DD, Containment Building. Hazardous waste and debris may be placed in units known as containment buildings for the purpose of interim storage or treatment.

The following is a list of potential ARARs for Superfund sites that discharge treated groundwater to Publicly Owned Treatment Works (POTW):

(49) Clean Water Act, (33 U.S.C. §§ 1251 et seq.), National Pollutant Discharge Elimination System (NPDES) Permit Regulations [40 CFR 122.42(b)], requires notification of issuing authority of re-evaluation of POTW pretreatment standards. In the event that the POTW does not have a local limitation for a particular pollutant found in the leachate from a Superfund site, it must re-evaluate its local limitations, and develop a limitation if necessary to protect the POTW from interference, pass-through, or contamination of the sewage sludge.

TABLE 7.1
Summary of ARARs - Footnotes
Southeast Rockford Groundwater Contamination Superfund Site
Rockford, Illinois

(50) Clean Water Act, (33 U.S.C. §§ 1251 et seq.), National Pretreatment Standards (40 CFR 403.5), discharge to a POTW must not interfere, pass through untreated into the receiving waters, or contaminate sludge.

(51) Clean Water Act, (33 U.S.C. §§ 1251 et seq.), National Pretreatment Program Requirements for POTWs (40 CFR 403.8(f)).

The following is a list of potential ARARs for Superfund sites that discharge treated groundwater to surface water bodies:

(52) Clean Water Act, (33 U.S.C. §§ 1251 et seq.), NPDES Permit Regulations (40 CFR 122.21), permit application must include a detailed description of the proposed action including a listing of all required environmental permits.

(53) Clean Water Act, (33 U.S.C. §§ 1251 et seq.), NPDES Permit Regulations (40 CFR 122.44), establishes limitations, standards and other NPDES permit conditions, including federally approved State water quality standards.

(54) Clean Water Act, (33 U.S.C. §§ 1251 et seq.), NPDES Permit Regulations (40 CFR 122.44 (a)), Best Available Technology (BAT) for toxic and non- conventional wastewater or Best Conventional Technology (BCT) for conventional pollutants.

(55) Clean Water Act, (33 U.S.C. §§ 1251 et seq.), NPDES Permit Regulations (40 CFR 122.44(b)), effluent limitations and standards requirements under Section 301, 302, 303,307, 318 and 405 of the Clean Water Act (CWA).

(56) Clean Water Act, (33 U.S.C. §§ 1251 et seq.), NPDES Permit Regulations, Water Quality Standards and State Requirements (40 CFR 122.44(d)), Water Quality Based Effluent Limitations (WQBELs), any requirements in addition to or more stringent than promulgated effluent limitations and guidelines or standards under Section 301, 304,306, 307, 318 and 405 of the CWA.

(57) Clean Water Act, (33 U.S.C. §§ 1251 et seq.), NPDES Permit Regulations, Technology Based Controls for Toxic Pollutants (40 CFR 122.44(e)), discharge limits established under paragraphs (a), (b), or (d) of 40 CFR 122.44 must be established for toxins to be discharged at concentrations exceeding levels achievable by the technology-based (BAT/BCT) standards.

(58) Clean Water Act, (33 U.S.C. §§ 1251 et seq.), NPDES Permit Regulations (40 CFR 122.44(i)), requires monitoring of discharges to ensure compliance.

(59) Clean Water Act, (33 U.S.C. §§ 1251 et seq.), NPDES Permit Regulations (40 CFR 125.100), the site operator must include a detailed description of the proposed action including a listing of all required environmental permits.

(60) Clean Water Act, (33 U.S.C. §§ 1251 et seq.), (40 CFR Part 131), states are granted enforcement jurisdiction over direct discharges and may adopt reasonable standards to protect or enhance the uses and qualities of state surface water bodies.

(61) Clean Water Act, (33 U.S.C. §§ 1251 et seq.), (40 CFR 136.1-136.4), requires adherence to sample preservation procedures including container materials and sample holding times.

(62) Fish and Wildlife Coordination Act, (16 U.S.C. §§ 661 et seq.), requires that any federal agency that proposes to modify a body of water must consult the U. S. Fish and Wildlife Services.

TABLE 7.1
Summary of ARARs - Footnotes
Southeast Rockford Groundwater Contamination Superfund Site
Rockford, Illinois

State

(63) Air - Illinois Environmental Protection Act, Section 9 (415 ILCS 5/9), Pollution Control Board (Title 35), Subtitle B - Subchapter C Emission Standards and Limitations for Stationary Sources, Part 211: Definitions and General Provisions (defines emission sources and related items); Part 112 Visible and Particulate Matter Emissions, sets emission limitations for particulate matter for a variety of operations, i.e., incinerators or waste storage piles. Also see Parts 214-219 that gives information regarding specific types of emissions per operation (e.g., sulfur, organic material, carbon monoxide and nitrogen oxide emissions) . These regulations may apply to some of the presumptive remedies in which emissions will be a factor, e.g., incineration.

(64) Air - Illinois Environmental Protection Act, Section 9 (415 ILCS 5/9), Pollution Control Board (Title 55), Subtitle B - Permits of Air Pollution, Part 201: Prohibition of Air Pollution, no person shall cause or threaten or allow the discharge or emission of any contaminant into the environment.

(65) Air - Illinois Environmental Protection Act, Section 9 (415 ILCS 5/9), Pollution Control Board (Title 35), Subtitle B — Air Pollution, Part 212; Visual and Particulate Matter Emission, emission standards for incinerators.

(66) Waste Disposal - Illinois Environmental Protection Act, Section 21 (415 ILCS 5/21), Pollution Control Board (Title 35), Subtitle G - Subchapter B: Permits, Part 703: RCRA Permit Program, rules on application for and issuance of RCRA permits; applicability and information requirements.

(67) Waste Disposal - Illinois Environmental Protection Act, Section 21 (415 ILCS 5/21), Pollution Control Board (Title 35), Subtitle G - Subchapter C: Hazardous Waste Operating Requirements, Parts 722 and 723, includes standards applicable to generators and transporters of hazardous waste, respectively.

(68) Waste Disposal - Illinois Environmental Protection Act, Section 21 (415 ILCS 5/21), Pollution Control Board (Title 35), Subtitle G - Subchapter C: Hazardous Waste Operating Requirements, Parts 724 and 725, includes standards applicable to owners and operators of hazardous waste treatment, storage and disposal facilities (Part 735 is for Interim Status) - corresponds to 40 CFR Parts 264 and 265.

(69) Waste Disposal - Illinois Environmental Protection Act, Section 21 (415 ILCS 5/21), Pollution Control Board (Title 35), Subtitle G - Subchapter C: Hazardous Waste Operating Requirements, Part 726, includes standards for the management of specific hazardous waste and specific types of hazardous waste management facilities; often applies to hazardous waste being used in such a way as to constitute disposal.

(70) Waste Disposal - Illinois Environmental Protection Act, Section 21 (415 ILCS 5/21), Pollution Control Board (Title 35), Subtitle G - Subchapter C: Hazardous Waste Operating Requirements, Part 728: Land Disposal Restrictions, defines land disposal restrictions for wastes, waste specific prohibitions, treatment standards, and prohibitions on storage.

(71) Waste Disposal - Illinois Environmental Protection Act, Section 21 (415 ILCS 5/21), Pollution Control Board (Title 35), Subtitle G - Subchapter C: Hazardous Waste Operating Requirements, Part 729: Prohibited Hazardous Wastes in Land Disposal Units, describes general hazardous waste restrictions and restrictions on halogenated solvents and liquid hazardous wastes in landfills.

TABLE 7.1
Summary of ARARs - Footnotes
Southeast Rockford Groundwater Contamination Superfund Site
Rockford, Illinois

(72) Waste Disposal - Illinois Environmental Protection Act, Section 21 (415 ILCS 5/21), Pollution Control Board (Title 35), Subtitle G - Subchapter D: Underground Injection Control and Underground Tank Storage Program, Part 731: Underground Storage Tanks, regulations regarding USTs.

(73) Waste Disposal - Illinois Environmental Protection Act, Section 21 (415 ILCS 5/21), Pollution Control Board (Title 35), Subtitle G - Subchapter D: Underground Injection Control and Underground Tank Storage Program, Part 740: Site Remediation Program, procedures established for investigation and remediation at sites where there is a release, or suspected release of hazardous substances, pesticides, or petroleum for review and approval of these activities.

(74) Waste Disposal - Illinois Environmental Protection Act, Section 21 (415 ILCS 5/21), Pollution Control Board (Title 35), Subtitle G - Subchapter D: Underground Injection Control and Underground Tank Storage Program, Part 742: Tiered Approach to Corrective Action Objectives, procedures for evaluating the risk to human health posed by environmental conditions and develop remediation objectives that achieve acceptable risk level. Also, to provide for adequate protection of human health and the environment based on risks to human health posed by environmental conditions while incorporating site related information.

(75) Waste Disposal - Illinois Environmental Protection Act, Section 21 (415 ILCS 5/21), Pollution Control Board (Title 35), Subtitle G - Subchapter H: Illinois "Superfund" Program, Part 750: Illinois Hazardous Substances Pollution Contingency Plan, regulation which is applicable whenever there is a release or a threat of a release at a site; this part assigns responsibility, organization and guidelines for phased hazardous substance response including development of remedial alternatives and engineering methods for on-site actions and remedying releases.

(76) Waste Disposal - Illinois Environmental Protection Act, Section 21 (415 ILCS 5/21), Pollution Control Board (Title 35), Subtitle G - Subchapter I: Solid Waste and Special Waste Hauling, Part 807 includes information on solid waste permitting, sanitary landfills and closure and post-closure care; Part 808 includes information on special waste classifications.

(77) Water - Illinois Environmental Protection Act, Section 12 (415 ILCS 5/12), Pollution Control Board (Title 35), Subtitle C - Part 304: Effluent Standards, general and temporary effluent standards including NPDES effluent standards.

(78) Water - Illinois Environmental Protection Act, Section 12 (415 ILCS 5/12), Pollution Control Board (Title 35), Subtitle C - Part 309: Permits, Subpart A includes provisions for NPDES permits and Subpart B includes provisions for all other water related permitting.

(79) Public Water Supplies - Illinois Environmental Protection Act, Section 14 (415 ILCS 5/14), Pollution Control Board (Title 35), Subtitle F - Part 620: Groundwater Quality, prescribes various aspects of groundwater quality including methods of classification of groundwater, non-degradation provisions, standards for quality of groundwater and various procedures and protocols for the management and protection of groundwater.

Other Requirements to be Considered (TBCs)

Federal

(80) Geological Survey Professional Paper 579-0, Elemental Composition of Surficial Materials in the Conterminous United States, 1971. Schacklette, H. T., J. C. Hamilton, J. G. Boerrgen and J. M. Bowles, provides background levels of metal in soils for the United States.

TABLE 7.1
Summary of ARARs - Footnotes
Southeast Rockford Groundwater Contamination Superfund Site
Rockford, Illinois

(81) Occupational Safety and Health Administration Standards (29 CFR Part 1910; 1910.1000), Subpart Z, Toxic and Hazardous Substances, sets worker exposure limits to toxic and hazardous substances and prescribes the methods for determination of concentrations.

(82) Occupational Safety and Health Administration Standards (29 CFR Part 1910; 1910.95), Subpart G, Occupational Noise Exposure, sets limits of worker exposure to noise during the performance of their duties.

(83) Occupational Safety and Health Administration Standards (29 CFR Part 1910; 1910.120), Hazardous Waste Operations and Emergency Response, sets the standards for workers conducting hazardous waste operations and emergency response.

(84) Occupational Safety and Health Administration Standards (29 CFR Part 1926), specifies the type of safety equipment and procedures to be followed during site remediation.

(85) Occupational Safety and Health Administration Standards Record keeping, Reporting and Related Regulations (29 CFR Part 1904), establishes Record keeping and reporting requirements for an employer under OSHA.

(86) OSWER Directive 9355.0-48FS - Presumptive Remedies: Site Characterization and Technology Selection for CERCLA Sites with Volatile Organic Compounds in Soil, September 1993, addresses the vadose zone only.

(87) OSWER Directive 9355.3-01, October 1988 Interim Final - Guidance for Conducting Remedial Investigations and Feasibility Studies under CERCLA Development and Screening of Remedial Alternatives, development of the FS Work Plan.

(88) OSWER Directive 9355.4-01-Guidance on Remedial Actions for Superfund Sites with PCB Contamination, sets soil PCB clean-up levels and management controls for PCB concentrations at Superfund sites.

(89) OSWER Directive 9355.4-12-Revised Interim Soil Lead Guidance for CERCLA Sites and RCRA Sites and RCRA Corrective Action Facilities, sets soil lead clean- up levels for Superfund sites.

(90) Safe Drinking Water Act (42 U.S.C. §§ 300f et seq.), Subpart F, Maximum Containment Level Goals (40 CFR 141.50-141.51), establishes enforceable clean-up goals for drinking water based on technology and health risk.

(91) Threshold Limit Values, consensus standards for controlling air quality in work place environments; used to assess site inhalation risks for soil removal operations.

(92) U. S. Environmental Protection Agency, RCRA Guidance Manual for Subpart G Closure and Post-Closure Standards and Subpart H Cost Estimating Requirements, January 1987. Provides guidance on closure and post- closure standards and cost estimating requirements for hazardous waste management units.

(93) U. S. Environmental Protection Agency, Disposal of Polychlorinated Biphenyls, Proposed Rule, December 6, 1994. Provides for disposal of non-liquid PCB remediation waste generated by clean-up process of their existing concentration; provides for a risk-based remediation option for PCB remediation waste.

(94) U. S. Environmental Protection Agency, Soil Screening Guidance, December 1994. Provides generic risk-based soil screening values for Superfund sites.

TABLE 7.1
Summary of ARARs - Footnotes
Southeast Rockford Groundwater Contamination Superfund Site
Rockford, Illinois

(95) U. S. Environmental Protection Agency Region III, Risk-Based Concentration Table, Smith R., 1995. Provides risk-based screening values for groundwater and soil concentrations.

(96) U. S. Environmental Protection Agency, Integrated Risk Information System (IRIS), 1995-1996. Provides reference doses and cancer potency slopes for calculating the hazard index or incremental cancer risk for specific site contaminants.

(97) U. S. Environmental Protection Agency, Interim Policy for Planning and Implementing CERCLA Off-Site Response Actions, November 5, 1995. Specifies appropriate method of off-site treatment on disposed of waste from a Superfund site.

(98) U. S. Environmental Protection Agency, Summary Quality Criteria for Water, Office of Science and Technology, 1992. Provides ambient water quality criteria.

(99) U. S.. Environmental Protection Agency, Quality Criteria for Water, Office of Water Regulation and Standards, U. S. EPA 440/5-86-001, 1986. Provides ambient water quality criteria.

(100)U. S. Environmental Protection Agency, Ambient Water Quality Criteria for Polychlorinated Biphenyls, U. S. EPA 440/ 5- 80- 068, 1980. Provides ambient water quality criteria for PCBs.

(101)U. S. Environmental Protection Agency, Risk Assessment Guidance for Superfund: Environmental Evaluation Manual, Volume II, Final Report, EPA/540/1-89/002, 1989. Provides guidance for conducting ecological risk assessments.

(102)U. S. Environmental Protection Agency, Risk Assessment Guidance for Superfund. Volume I. Human Health Evaluation Manual Supplemental Guidance. Standard Default Exposure Factors, Interim Final, March, 1991. OSWER Directive # 9285.6-03, 1991. Provides exposure factors for estimating hazard or risk in human health risk assessments.

(103) U. S. Environmental Protection Agency, Risk Assessment Guidance for Superfund. Volume I: Human Health Evaluation Manual, Part A, December, 1989. U. S. EPA 540/1-89/002. Office of Emergency and Remedial Response. Provides guidance on preparing a baseline human health risk assessment using the four steps, data evaluation, exposure assessment, toxicity assessment, risk characterization.

DRAWINGS

AREA 9/10 REMEDIAL DESIGN
FINAL DESIGN
100% DESIGN

SOUTHEAST ROCKFORD GROUNDWATER CONTAMINATION SUPERFUND SITE
ROCKFORD, ILLINOIS

CERCLIS ID NO. ILD981000417

MARCH 2007

PREPARED BY

SECOR

446 EISENHOWER LANE NORTH
LOMBARD, ILLINOIS
PHONE: (630) 792-1680/792-1691 (FAX)

SECOR PN: 13UN.02072.04.0001

LICENSED PROFESSIONAL ENGINEER
JOHN G. PUCKETT
062-059203
STATE OF ILLINOIS

FINAL DESIGN 100% DESIGN

LOCATION MAP

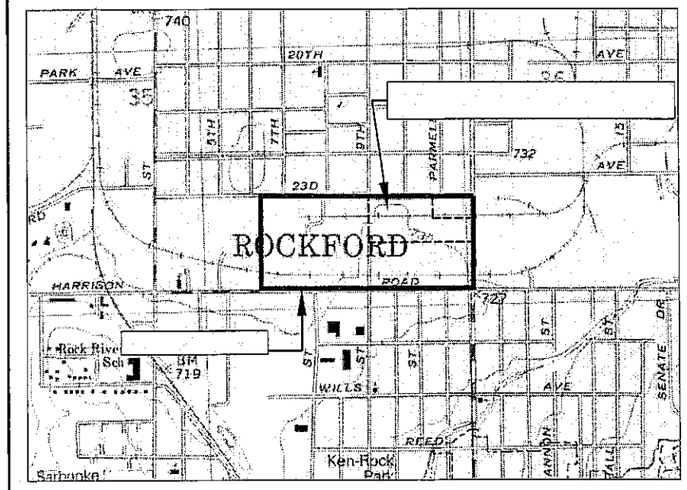

REFERENCE: USGS 7.5 MINUTE QUADRANGLE; ROCKFORD SOUTH, ILLINOIS; 1993

0 1/2 1

APPROXIMATE SCALE (MILES)

QUADRANGLE LOCATION

N

DRAWING INDEX

DRAWING NUMBER	TITLE AND DESCRIPTION
Y1	COVER SHEET AND AREA 9/10 SITE LOCATION
Y2	UTILITY AND PROPERTY OWNERSHIP MAP
Y3	WELL LOCATIONS AND GROUND SURFACE ELEVATIONS
Y4	GROUNDWATER AND SOIL REMEDIATION AREAS
Y5	AIR SPARGE AND SOIL VAPOR EXTRACTION TREATMENT SYSTEM DETAIL
Y6	WELL CONSTRUCTION DETAILS
Y7	CLAY CAP ENGINEERED BARRIER CROSS SECTION
P1	PIPING AND INSTRUMENTATION DIAGRAM LEGEND
P2	AIR SPARGE, SOIL VAPOR EXTRACTION, AND TREATMENT PIPING AND INSTRUMENTATION DIAGRAM
M1	AIR SPARGE AND SOIL VAPOR EXTRACTION AND AIR TREATMENT PLANT EQUIPMENT LAYOUT
M2	AIR SPARGE AND SOIL VAPOR EXTRACTION PIPING DETAILS
E1	ELECTRICAL SYMBOLS LEGEND
E2	ELECTRICAL ONE-LINE DIAGRAM

REV	DATE	DESCRIPTION	DSGN	CHCK	APPRV
A		ISSUED FOR REVIEW			
B		ISSUED FOR REVIEW			
0					
1					

DESIGNED BY: KTW
CHECKED BY: JGP
APPROVED BY: DMC/KTW
DRAWN BY: JC
DATE: 3/28/07

FILEPATH: F:\WORK\AUTOCAD\FIGURES\UTC

02072F17.DWG

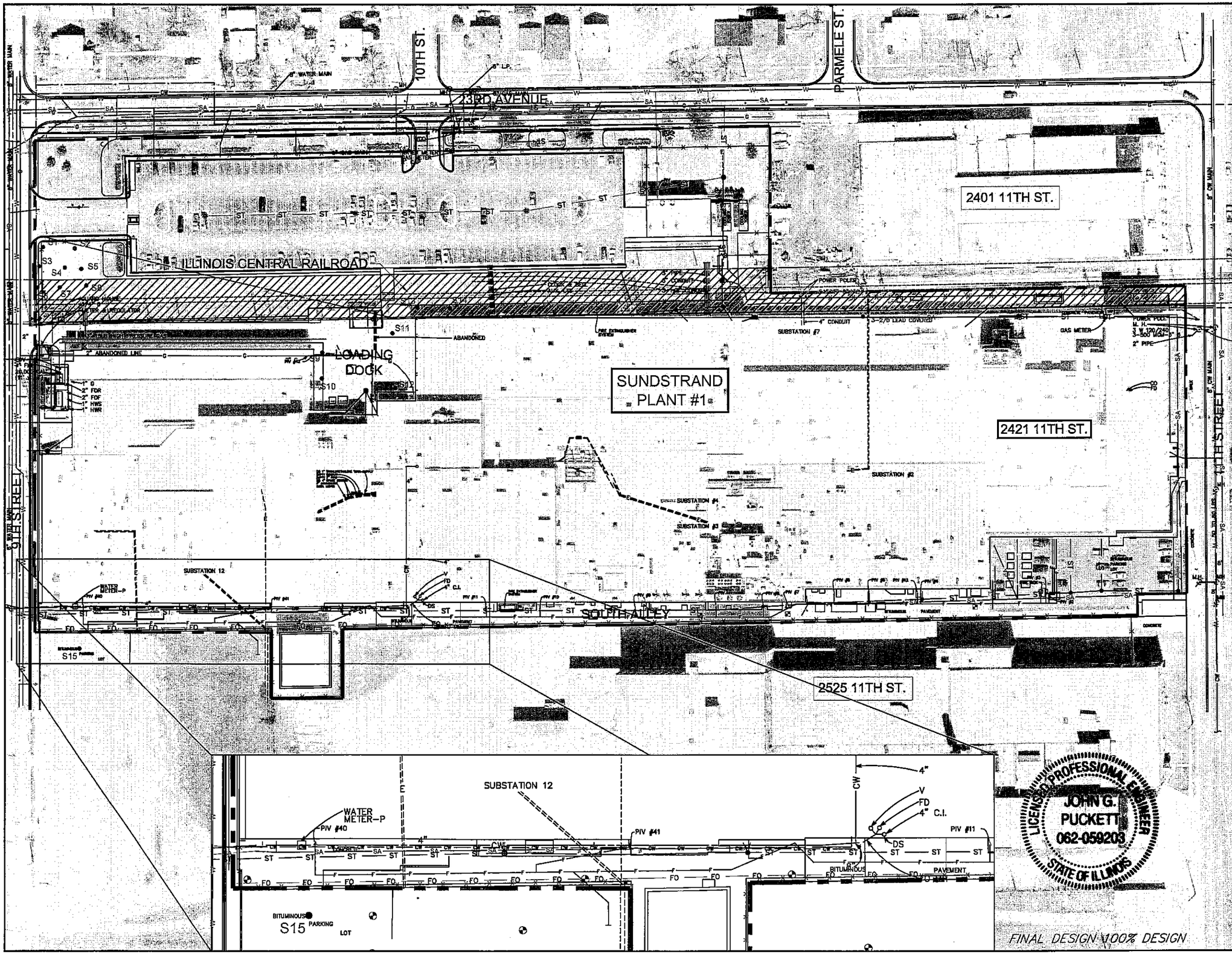

N

LEGEND:

- PROPERTY BOUNDARY
- RAILROAD PROPERTY
- F — FIRE PROTECTION WET
- CW — COLD WATER
- JS — JACKET SUPPLY
- JR — JACKET RETURN
- AS — AUXILIARY SUPPLY
- AR — AUXILIARY RETURN
- ST — STORM SEWER
- SA — SANITARY SEWER
- W — WATER MAIN
- E — ELECTRICAL
- FO — FIBER OPTIC (PLANNED)

NOTE:

HS LEASES LAND IDENTIFIED WITHIN THE PROPERTY BOUNDARY FROM ILLINOIS CENTRAL RAILROAD (OWNED BY CANADIAN NATIONAL RAILROAD) LEASE NO. 8565.

UTILITIES IN WORK AREAS TO BE FIELD VERIFIED BY CONTRACTORS

GAS, ELECTRIC, AND COMMUNICATION LINES NOT AVAILABLE ON PLANT DRAWINGS NO. 5077PF01 AND 6164P1

0 100 200

APPROXIMATE SCALE (FEET)

PREPARED BY:

SECOR
446 EISENHOWER LANE NORTH
LOMBARD, ILLINOIS 60148
PHONE: (630) 792-1680/792-1691 (FAX)

FOR:

AREA 9/10 REMEDIAL DESIGN
SOUTHEAST ROCKFORD GROUNDWATER CONTAMINATION SUPERFUND SITE
ROCKFORD, ILLINOIS

TITLE:

UTILITY AND PROPERTY OWNERSHIP MAP

DRAWN BY: JC	DESIGNED BY: KTW
CHECKED BY: JGP	APPROVED BY: DMC/KTW
PROJECT NUMBER: 13UN.02072.04	SCALE: AS SHOWN
DATE: 3/26/07	FILE PATH: F:\WORK\AUTOCAD\FIGURES\UTC

SHEET: Y2

02072F16.dwg

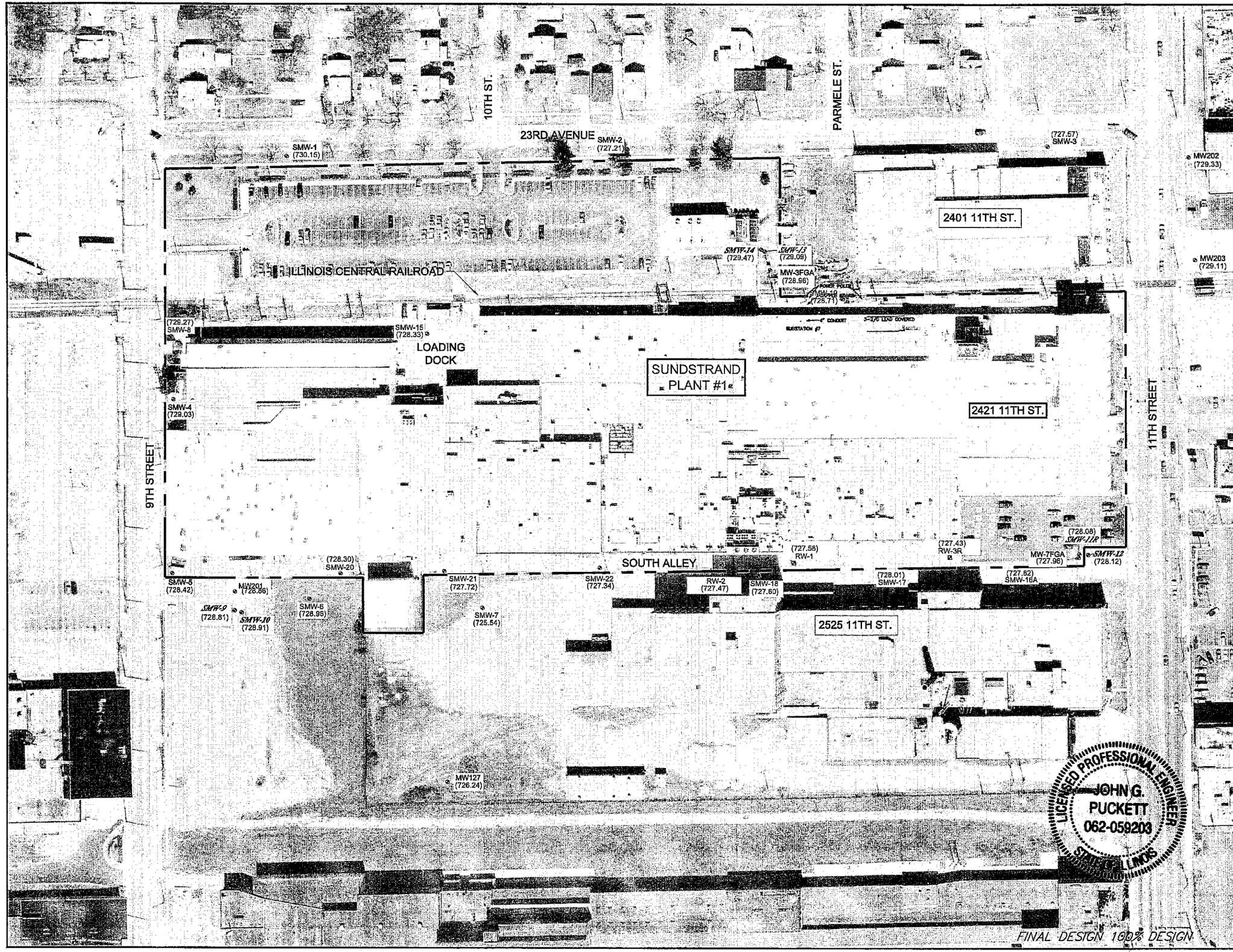

N

LEGEND:

- PROPERTY BOUNDARY
- MONITORING WELL
- RECOVERY WELL
- (327.72) ELEVATION AT WELL LOCATION

NOTE:

GROUND SURFACE ELEVATION RELATIVE TO MEAN SEA LEVEL. FROM APRIL 2004 SURVEY COMPLETED BY MISSMAN STANLEY AND ASSOCIATES, P.C. OF ROCKFORD, ILLINOIS.

0 120 240

APPROXIMATE SCALE (FEET)

PREPARED BY:

SECOR
446 EISENHOWER LANE NORTH
LOMBARD, ILLINOIS 60148
PHONE: (630) 792-1680/792-1691 (FAX)

FOR:

AREA 9/10 REMEDIAL DESIGN
SOUTHEAST ROCKFORD GROUNDWATER
CONTAMINATION SUPERFUND SITE
ROCKFORD, ILLINOIS

TITLE:

WELL LOCATIONS AND GROUND SURFACE ELEVATIONS

DRAWN BY: JC	DESIGNED BY: KTW
CHECKED BY: JGP	APPROVED BY: DMC/KTW
PROJECT NUMBER: 13UN.02072.04	SCALE: AS SHOWN
DATE: 3/28/07	FILE PATH: F:\WORK\AUTOCAD\FIGURES\UTC

SHEET: Y3

02072F16.dwg

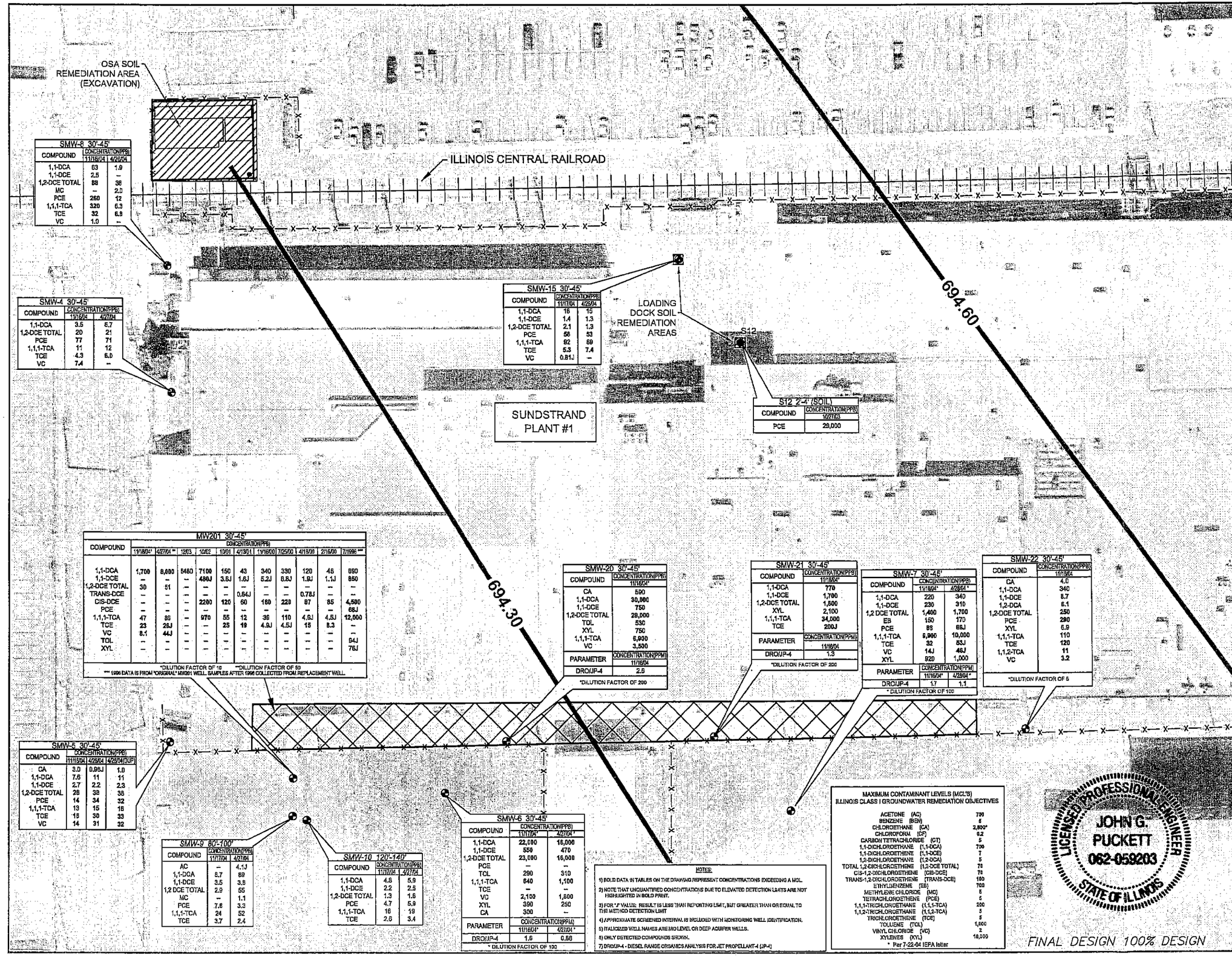

SMW-8 30'-45'

COMPOUND	CONCENTRATION(PPB) 11/16/04	4/26/04
1,1-DCA	63	1.9
1,1-DCE	2.5	--
1,2-DCE TOTAL	88	38
MC	--	2.0
PCE	260	12
1,1,1-TCA	320	6.3
TCE	32	6.9
VC	1.0	--

SMW-4 30'-45'

COMPOUND	CONCENTRATION(PPB) 11/16/04	4/27/04
1,1-DCA	3.5	6.7
1,2-DCE TOTAL	20	21
PCE	77	71
1,1,1-TCA	11	12
TCE	4.3	6.0
VC	7.4	--

SMW-15 30'-45'

COMPOUND	CONCENTRATION(PPB) 11/17/04	4/28/04
1,1-DCA	16	15
1,1-DCE	1.4	1.3
1,2-DCE TOTAL	2.1	1.3
PCE	56	53
1,1,1-TCA	92	69
TCE	5.3	7.4
VC	0.81J	--

S12 2'-4' (SOIL)

COMPOUND	CONCENTRATION(PPB) 10/27/03
PCE	29,000

MW201 30'-45'

COMPOUND	CONCENTRATION(PPB) 11/16/04*	4/27/04**	12/03	10/02	10/01	4/19/01	11/16/00	7/25/00	4/19/00	2/16/00	7/1996***
1,1-DCA	1,700	8,000	5480	7100	150	43	340	390	120	45	690
1,1-DCE	--	--	--	480J	3.6J	1.6J	5.2J	5.6J	1.9J	1.1J	850
1,2-DCE TOTAL	30	51	--	--	--	--	--	--	--	--	--
TRANS-DCE	--	--	--	--	0.64J	--	--	--	0.78J	--	--
CIS-DCE	--	--	--	2280	120	60	180	220	87	85	4,500
PCE	--	--	--	--	--	--	--	--	--	--	66J
1,1,1-TCA	47	86	--	970	55	12	36	110	4.9J	4.5J	12,000
TCE	23	26J	--	--	25	19	4.9J	4.5J	15	8.3	--
VC	8.1	44J	--	--	--	--	--	--	--	--	--
TOL	--	--	--	--	--	--	--	--	--	--	94J
XYL	--	--	--	--	--	--	--	--	--	--	76J

*DILUTION FACTOR OF 10 **DILUTION FACTOR OF 50
*** 1996 DATA IS FROM "ORIGINAL" MW201 WELL. SAMPLES AFTER 1996 COLLECTED FROM REPLACEMENT WELL.

SMW-20 30'-45'

COMPOUND	CONCENTRATION(PPB) 11/16/04*
CA	590
1,1-DCA	30,000
1,1-DCE	750
1,2-DCE TOTAL	28,000
TOL	530
XYL	750
1,1,1-TCA	6,900
VC	3,500
PARAMETER	**CONCENTRATION(PPM) 11/16/04**
DRO/JP-4	2.6

*DILUTION FACTOR OF 200

SMW-21 30'-45'

COMPOUND	CONCENTRATION(PPB) 11/16/04*
1,1-DCA	770
1,1-DCE	1,700
1,2-DCE TOTAL	1,800
XYL	2,100
1,1,1-TCA	34,000
TCE	200J
PARAMETER	**CONCENTRATION(PPM) 11/16/04**
DRO/JP-4	1.3

*DILUTION FACTOR OF 200

SMW-7 30'-45'

COMPOUND	CONCENTRATION(PPB) 11/16/04*	4/28/04*
1,1-DCA	220	340
1,1-DCE	230	310
1,2 DCE TOTAL	1,400	1,700
EB	150	170
PCE	85	68J
1,1,1-TCA	9,900	10,000
TCE	32	53J
VC	14J	46J
XYL	920	1,000
PARAMETER	**CONCENTRATION(PPM) 11/16/04***	**4/28/04***
DRO/JP-4	1.7	1.1

* DILUTION FACTOR OF 100

SMW-22 30'-45'

COMPOUND	CONCENTRATION(PPB) 11/18/04
CA	4.0
1,1-DCA	340
1,1-DCE	8.7
1,2-DCA	6.1
1,2-DCE TOTAL	250
PCE	290
XYL	6.9
1,1,1-TCA	110
TCE	120
1,1,2-TCA	11
VC	3.2

*DILUTION FACTOR OF 5

SMW-5 30'-45'

COMPOUND	CONCENTRATION(PPB) 11/15/04	4/26/04	4/26/04(DUP)
CA	3.0	0.96J	1.0
1,1-DCA	7.6	11	11
1,1-DCE	2.7	2.2	2.3
1,2-DCE TOTAL	26	38	38
PCE	14	34	32
1,1,1-TCA	13	15	16
TCE	18	30	33
VC	14	31	32

SMW-9 80'-100'

COMPOUND	CONCENTRATION(PPB) 11/17/04	4/27/04
AC	--	4.1J
1,1-DCA	8.7	69
1,1-DCE	3.5	3.8
1,2 DCE TOTAL	2.9	55
MC	--	1.1
PCE	7.6	3.3
1,1,1-TCA	24	52
TCE	3.7	2.4

SMW-10 120'-140'

COMPOUND	CONCENTRATION(PPB) 11/17/04	4/27/04
1,1-DCA	4.8	5.9
1,1-DCE	2.2	2.5
1,2-DCE TOTAL	1.3	1.6
PCE	4.7	5.9
1,1,1-TCA	16	19
TCE	2.6	3.4

SMW-6 30'-45'

COMPOUND	CONCENTRATION(PPB) 11/17/04*	4/27/04*
1,1-DCA	22,000	16,000
1,1-DCE	550	470
1,2-DCE TOTAL	23,000	16,000
PCE	--	--
TOL	290	310
1,1,1-TCA	640	1,100
TCE	--	--
VC	2,100	1,800
XYL	390	250
CA	300	--
PARAMETER	**CONCENTRATION(PPM) 11/16/04***	**4/27/04***
DRO/JP-4	1.6	0.56

* DILUTION FACTOR OF 100

NOTES:

1) BOLD DATA IN TABLES ON THE DRAWING REPRESENT CONCENTRATIONS EXCEEDING A MCL.
2) NOTE THAT UNQUANTIFIED CONCENTRATIONS DUE TO ELEVATED DETECTION LIMITS ARE NOT HIGHLIGHTED IN BOLD PRINT.
3) FOR "J" VALUE: RESULT IS LESS THAN REPORTING LIMIT, BUT GREATER THAN OR EQUAL TO THE METHOD DETECTION LIMIT
4) APPROXIMATE SCREENED INTERVAL IS INCLUDED WITH MONITORING WELL IDENTIFICATION.
5) ITALICIZED WELL NAMES ARE MID LEVEL OR DEEP AQUIFER WELLS.
6) ONLY DETECTED COMPOUNDS SHOWN.
7) DRO/JP-4 - DIESEL RANGE ORGANICS ANALYSIS FOR JET PROPELLANT-4 (JP-4)

MAXIMUM CONTAMINANT LEVELS (MCL'S)
ILLINOIS CLASS I GROUNDWATER REMEDIATION OBJECTIVES

ACETONE	(AC)	700
BENZENE	(BEN)	5
CHLOROETHANE	(CA)	2,800*
CHLOROFORM	(CF)	0.2
CARBON TETRACHLORIDE	(CT)	5
1,1-DICHLOROETHANE	(1,1-DCA)	700
1,1-DICHLOROETHENE	(1,1-DCE)	7
1,2-DICHLOROETHANE	(1,2-DCA)	5
TOTAL 1,2-DICHLOROETHENE	(1,2-DCE TOTAL)	70
CIS-1,2-DICHLOROETHENE	(CIS-DCE)	70
TRANS-1,2-DICHLOROETHENE	(TRANS-DCE)	100
ETHYLBENZENE	(EB)	700
METHYLENE CHLORIDE	(MC)	5
TETRACHLOROETHENE	(PCE)	5
1,1,1-TRICHLOROETHANE	(1,1,1-TCA)	200
1,1,2-TRICHLOROETHANE	(1,1,2-TCA)	5
TRICHLOROETHENE	(TCE)	5
TOLUENE	(TOL)	1,000
VINYL CHLORIDE	(VC)	2
XYLENES	(XYL)	10,000

* Per 7-22-04 IEPA letter

LICENSED PROFESSIONAL ENGINEER
JOHN G. PUCKETT
062-059203
STATE OF ILLINOIS

FINAL DESIGN 100% DESIGN

LEGEND

- MONITORING WELL
- SOIL BORING
- RECOVERY WELL
- FENCE LINE
- GROUNDWATER POTENTIOMETRIC CONTOUR LINE
- SOIL REMEDIATION AREA
- AIR SPARGE AND SVE GROUNDWATER REMEDIATION TREATMENT ZONE

NOTE:
GROUNDWATER POTENTIOMETRIC SURFACE CONTOURS FROM MARCH 23, 2006 IN FEET ABOVE MEAN SEA LEVEL.

DATA PRESENTED IS FOR GROUNDWATER EXCEPT AT S12

0 60 120
APPROXIMATE SCALE (FEET)

PREPARED BY:
SECOR
446 EISENHOWER LANE NORTH
LOMBARD, ILLINOIS 60148
PHONE: (630) 792-1680/792-1691 (FAX)

FOR:
AREA 9/10 REMEDIAL DESIGN
SOUTHEAST ROCKFORD GROUNDWATER CONTAMINATION SUPERFUND SITE
ROCKFORD, ILLINOIS

TITLE:
GROUNDWATER AND SOIL REMEDIATION AREAS

DRAWN BY: JC	DESIGNED BY: KTW
CHECKED BY: JGP	APPROVED BY: DMC/KTW
PROJECT NUMBER: 13UN.02072.04	SCALE: AS SHOWN
DATE: 3/28/07	FILE PATH: F:\WORK\AUTOCAD\FIGURES\UTC
SHEET: Y4	

02072F18.dwg

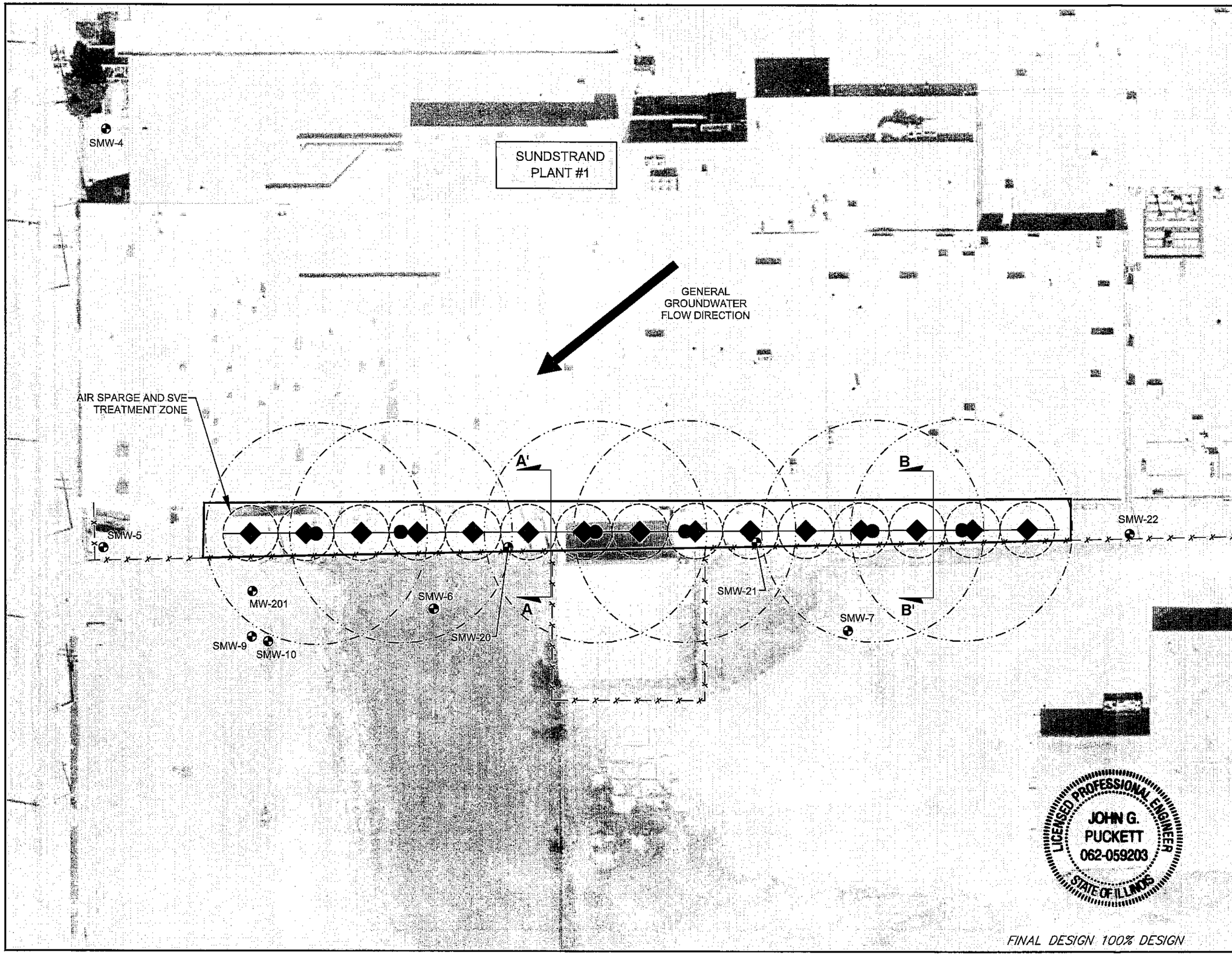

N

LEGEND

- MONITORING WELL
- FENCE LINE
- SVE WELL
- AIR SPARGE WELL
- SVE RADIUS OF INFLUENCE
- AIR SPARGE RADIUS OF INFLUENCE
- AIR SPARGE AND SVE GROUNDWATER REMEDIATION TREATMENT ZONE

0 50 100

APPROXIMATE SCALE (FEET)

PREPARED BY:

SECOR
446 EISENHOWER LANE NORTH
LOMBARD, ILLINOIS 60148
PHONE: (630) 792-1660/792-1691 (FAX)

FOR:

AREA 9/10 REMEDIAL DESIGN
SOUTHEAST ROCKFORD GROUNDWATER CONTAMINATION SUPERFUND SITE
ROCKFORD, ILLINOIS

TITLE:

AIR SPARGE AND SOIL VAPOR EXTRACTION TREATMENT ZONE DETAILS

DRAWN BY: JC	DESIGNED BY: JGP
CHECKED BY: KTW	APPROVED BY: DMC/KTW
PROJECT NUMBER: 13UN.02072.04	SCALE: AS SHOWN
DATE: 3/28/07	FILE PATH: F:\WORK\AUTOCAD\FIGURES\UTC

SHEET: Y5

02072F18.dwg

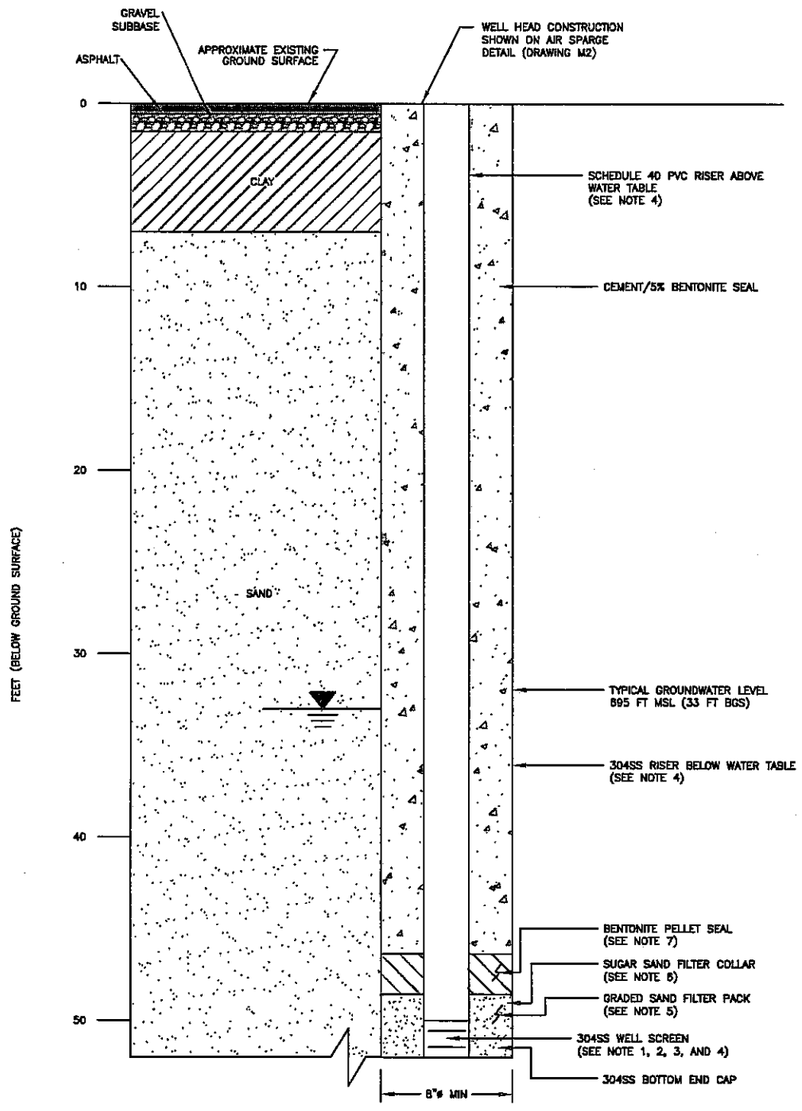

AIR SPARGE WELL CONSTRUCTION

NOT TO SCALE

NOTES:

1. WELL SCREEN APPROXIMATELY 50–52 FEET (ELEVATION 676–678 FT ABOVE MSL) APPROXIMATELY 17–19 FT BELOW THE TYPICAL WATER TABLE ELEVATION.
2. WELL SCREEN (2 FEET LENGTH) WILL BE INSTALLED
3. SCREEN SLOT SIZE WILL BE 0.010
4. WELL SCREEN AND RISER TO BE 1.5 INCH DIAMETER
5. FILTER PACK SAND WILL BE RED FLINT #3545 (OR EQUIVALENT)
6. A 1 FOOT SUGAR SAND FILTER COLLAR SAND WILL BE PLACED ABOVE THE FILTER PACK.
7. BENTONITE PELLET SEAL EXTENDS APPROXIMATELY 3 FEET ABOVE TOP OF FILTER COLLAR.
8. ACTUAL DEPTH TO BOTTOM OF BOREHOLE WILL BE DETERMINED BY GEOLOGIST/ENGINEER IN THE FIELD.

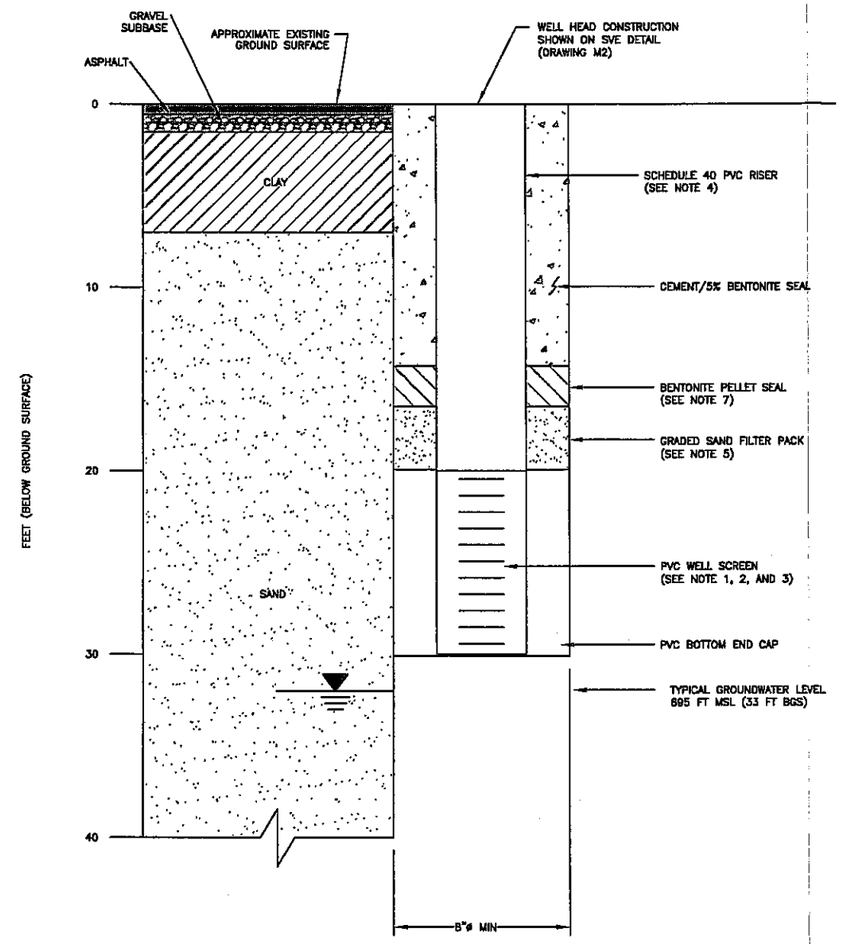

SOIL VAPOR EXTRACTION WELL CONSTRUCTION

NOT TO SCALE

NOTES:

1. WELL SCREEN APPROXIMATELY 20–30 FEET (ELEVATION 698–708 FT ABOVE MSL) APPROXIMATELY 3 FT ABOVE THE TYPICAL WATER TABLE ELEVATION.
2. WELL SCREEN (10 FEET LENGTH) WILL BE INSTALLED
3. SCREEN SLOT SIZE WILL BE 0.010
4. WELL SCREEN AND RISER TO BE 4 INCH DIAMETER
5. FILTER PACK SAND WILL BE RED FLINT #3545 (OR EQUIVALENT)
6. A 1 FOOT SUGAR SAND FILTER COLLAR SAND WILL BE PLACED ABOVE THE FILTER PACK.
7. BENTONITE PELLET SEAL EXTENDS APPROXIMATELY 3 FEET ABOVE TOP OF FILTER COLLAR.
8. ACTUAL DEPTH TO BOTTOM OF BOREHOLE WILL BE DETERMINED BY GEOLOGIST/ENGINEER IN THE FIELD.

FINAL DESIGN 100% DESIGN

PREPARED BY:

SECOR
446 EISENHOWER LANE NORTH
LOMBARD, ILLINOIS 60148
PHONE: (630) 792-1690/792-1591 (FAX)

FOR:

AREA 9/10 REMEDIAL DESIGN
SOUTHEAST ROCKFORD GROUNDWATER CONTAMINATION SUPERFUND SITE
ROCKFORD, ILLINOIS

TITLE:

WELL CONSTRUCTION DETAILS

DRAWN BY: JC	DESIGNED BY: KTW
CHECKED BY: JGP	APPROVED BY: DMC/KTW
PROJECT NUMBER: 13UN.02072.04	SCALE: NTS
DATE: 3/28/07	FILE PATH: F:\WORK\AUTOCAD\FIGURES\UTC

SHEET: Y6

02072F17.dwg

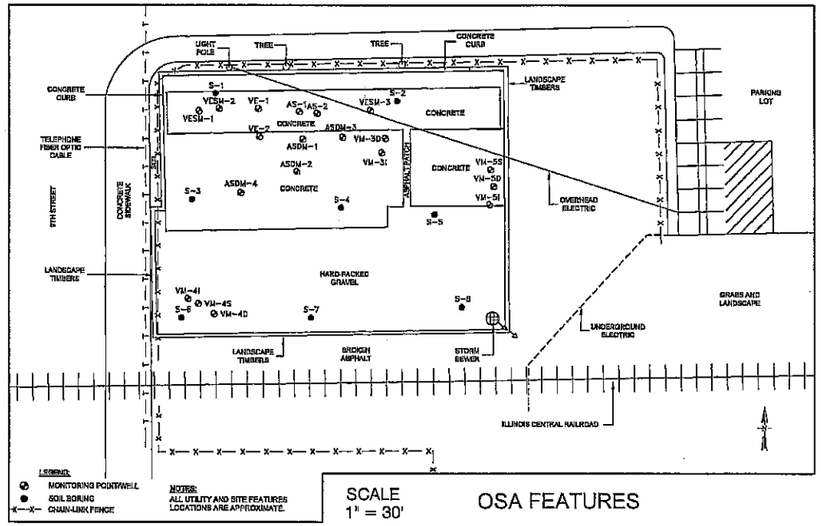

SCALE
1" = 30'

OSA FEATURES

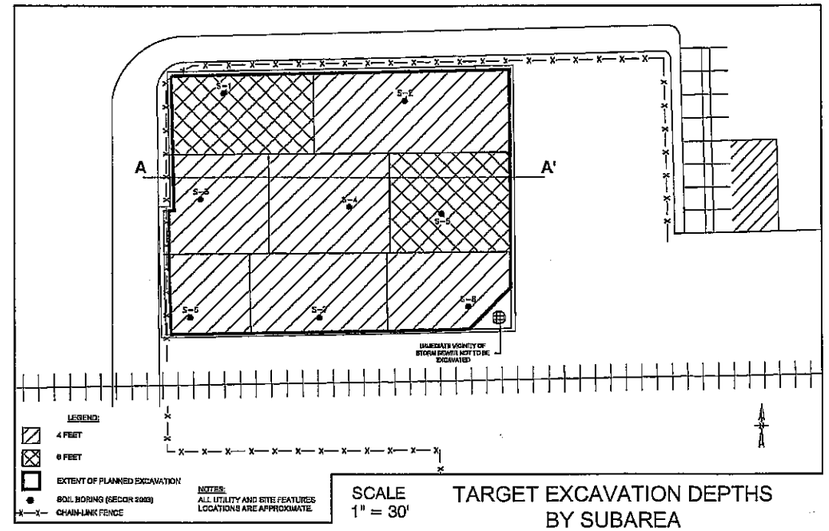

SCALE
1" = 30'

TARGET EXCAVATION DEPTHS
BY SUBAREA

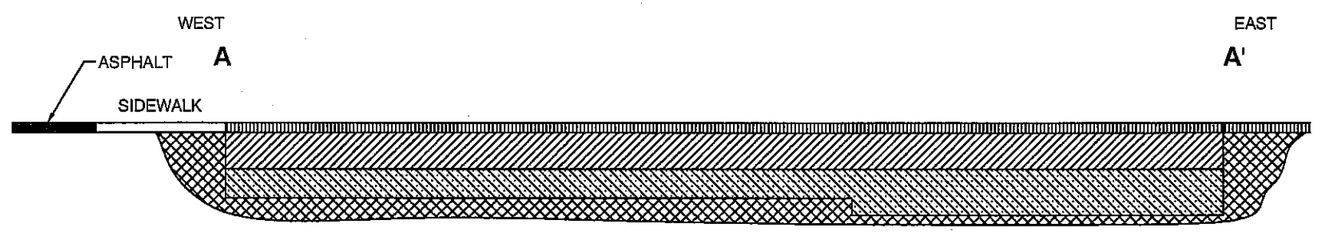

LEGEND:

- TOP SOIL TO BE SEEDED WITH GRASS (0.3 FEET APPROXIMATELY)
- COMPACTED CLAY 3 FEET MINIMUM (TO BE PLACED IN 1 FOOT LIFTS)
- CLEAN FILL. 3 TO 6 FEET
- NATIVE SOIL (SILTY CLAY TO 6 FEET)

0 10 20

SCALE IN FEET

FINAL DESIGN 100% DESIGN

LICENSED PROFESSIONAL ENGINEER
JOHN G. PUCKETT
062-059203
STATE OF ILLINOIS

PREPARED BY:

SECOR
446 EISENHOWER LANE NORTH
LOMBARD, ILLINOIS 60148
PHONE: (630) 792-1680/792-1691 (FAX)

FOR:

AREA 9/10 REMEDIAL DESIGN
SOUTHEAST ROCKFORD GROUNDWATER
CONTAMINATION SUPERFUND SITE
ROCKFORD, ILLINOIS

TITLE:

CLAY CAP
ENGINEERED BARRIER
CROSS SECTION

DRAWN BY: JC	DESIGNED BY: KTW
CHECKED BY: JGP	APPROVED BY: DMC/KTW
PROJECT NUMBER: 13UN.02072.04	SCALE: -
DATE: 3/28/07	FILE PATH: F:\WORK\AUTOCAD\FIGURES\UTC

SHEET: Y7

02072F17.dwg

VALVE AND PIPING SYMBOLS

- GATE VALVE
- RELIEF OR SAFETY VALVE
- BALL VALVE
- NO NORMALLY OPEN
- NC NORMALLY CLOSED
- FLEXIBLE HOSE
- AIR RELEASE VALVE
- REDUCER
- UNION
- CLEANOUT (CO)
- REMOVABLE CAP
- EXHAUST TO ATMOSPHERE (INSIDE)
- EXHAUST TO ATMOSPHERE (OUTSIDE)
- QUICK DISCONNECT COUPLING
- GAUGE SEAL
- AIR INLET
- AIR EXHAUST

VALVE OPERATOR SYMBOLS

- S SOLENOID
- T HANDWHEEL OR LEVER
- A ACTUATOR

PRIMARY ELEMENT SYMBOLS – FLOW

- PITOT TUBE
- VENTURI OR FLOW TUBE
- ROTAMETER
- FLOW METER

EQUIPMENT SYMBOLS

- BLOWER/COMPRESSOR
- AIR/WATER SEPERATOR TANK
- PSI PRESSURE MEASUREMENT
- TI TEMPERATURE INDICATOR
- VI VACUUM INDICATOR
- AIR FILTER
- WELL (AIR SPARGE OR SVE)
- PSS PRESSURE SWITCH

GENERAL INSTRUMENT SYMBOLS

ONE VARIABLE TWO VARIABLES

- LOCALLY MOUNTED
- PANEL MOUNTED
- REAR-OF-PANEL MOUNTED
- I INTERLOCK
- P PURGE

LINE SYMBOLS

- PROCESS PIPES OR CHANNELS
- CONNECTION TO PROCESS, MECHANICAL LINK OR INSTRUMENT SUPPLY
- PNEUMATIC SIGNAL
- ELECTRIC SIGNAL
- CAPILLARY TUBING (FILLED SYSTEM)
- HYDRAULIC SIGNAL
- ELECTROMAGNETIC OR SONIC SIGNAL NO WIRING OR TUBING

INSTRUMENT IDENTIFICATION TABLE

FIRST LETTER			SUCCEEDING LETTERS		
	MEASURED OR INITIATING VARIABLE	MODIFIER	READOUT OR PASSIVE FUNCTION	OUTPUT FUNCTION	MODIFIER
A	ANALYSIS		ALARM		
B	BURNER FLAME				
C	CONDUCTIVITY			CONTROL	CLOSED
D	DENSITY (SP. GR.)	DIFFERENTIAL			
E	VOLTAGE		PRIMARY ELEMENT		
F	FLOW RATE	RATIO			
G	GAUGING (DIMENSIONAL)		GLASS		
H	HAND (MANUAL)				HIGH
I	CURRENT		INDICATE		
J	POWER	SCAN			
K	TIME OR SCHEDULE			CONTROL STATION	
L	LEVEL		LIGHT (PILOT)		LOW
M	MOISTURE OR HUMIDITY		MEASUREMENT		MIDDLE
N	NORMALLY				
O			ORIFICE		
P	PRESSURE OR VACUUM		POINT (TEST)		
Q	QUANT. OR EVENT	INTEGRATE			
R	RADIOACTIVITY		RELIEF		
S	SAMPLE	SAFETY		SWITCH	
T	TEMPERATURE			TRANSMIT	
U	MULTIVARIABLE		MULTIFUNCTION		
V	VACUUM			VALVE OR DAMPER	
W	WEIGHT OR FORCE		WELL		
X	UNCLASSIFIED		UNCLASSIFIED		
Y				RELAY OR COMPUTE	
Z	POSITION			DRIVE, ACTUATE	

PROCESS LINE ABBREVIATIONS

AIR	AIR, ATMOSPHERIC PRESSURE
BW	BACKWASH
CA	COMPRESSED AIR
D	DRAIN
EFF	EFFLUENT
EXH	EXHAUST
NPW	NON-POTABLE WATER
PW	POTABLE WATER
S	SANITARY
SL	SLUDGE
SP	SAMPLE PORT
SS	STORM SEWER
V	VENT
VAP	VAPOR

PIPING MATERIAL IDENTIFICATION

CPVC	CHLORINATED POLYVINYL CHLORIDE
CSP	CARBON STEEL PIPE
COP	COPPER
CMP	CORRUGATED METAL PIPE
CIP	CAST IRON PIPE
DIP	DUCTILE IRON PIPE
GAL	GALVANIZED STEEL PIPE
GSD	GALVANIZED STEEL DUCTING
HDPE	HIGH DENSITY POLYETHYLENE
PE	POLYETHYLENE PIPE
PP	POLYPROPYLENE PIPE
PVC	POLYVINYL CHLORIDE PIPE
RCP	REINFORCED CONCRETE PIPE
RUB	RUBBER HOSE
SS	STAINLESS STEEL PIPE
VCP	VITRIFIED CLAY PIPE

PROCESS PIPING IDENTIFICATION

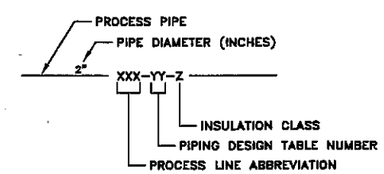

INSTRUMENT IDENTIFICATION

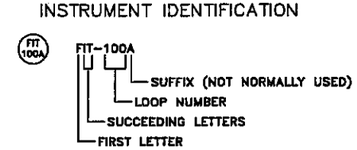

FUNCTION ABBREVIATIONS

DO	DISSOLVED OXYGEN	OC	OPEN-CLOSE
FC	FAIL CLOSED	OO	ON-OFF (MAINTAINED)
FI	FAIL INDETERMINATE	ORP	OXIDATION REDUCTION POTENTIAL
FL	FAIL LOCKED	OSC	OPEN-STOP-CLOSE (MOMENTARY)
FO	FAIL OPEN	SS	START-STOP (MOMENTARY)
FQI	FLOW QUALITY INDICATOR	>	HIGH SELECT
HOA	HAND-OFF-AUTOMATIC	<	LOW SELECT
I/I	CURRENT-TO-CURRENT	√	SQUARE ROOT
I/P	CURRENT-TO-PNEUMATIC	Σ	ADD OR TOTALIZE
LEL	LOWER EXPLOSIVE LIMIT		
LR	LOCAL-REMOTE		

FINAL DESIGN 100% DESIGN

LICENSED PROFESSIONAL ENGINEER
JOHN G. PUCKETT
062-059203
STATE OF ILLINOIS

PREPARED BY:

SECOR
446 EISENHOWER LANE NORTH
LOMBARD, ILLINOIS 60148
PHONE: (630) 792-1680/792-1691 (FAX)

FOR:

AREA 9/10 REMEDIAL DESIGN
SOUTHEAST ROCKFORD GROUNDWATER
CONTAMINATION SUPERFUND SITE
ROCKFORD, ILLINOIS

TITLE:

PIPING AND INSTRUMENTATION DIAGRAM LEGEND

DRAWN BY: JC	DESIGNED BY: JGP
CHECKED BY: KTW	APPROVED BY: DMC/KTW
PROJECT NUMBER: 13UN.02072.04	SCALE: NOT APPLICABLE
DATE: 3/28/07	FILE PATH: F:\WORK\AUTOCAD\FIGURES\UTC
SHEET: P1	

02072F17.dwg

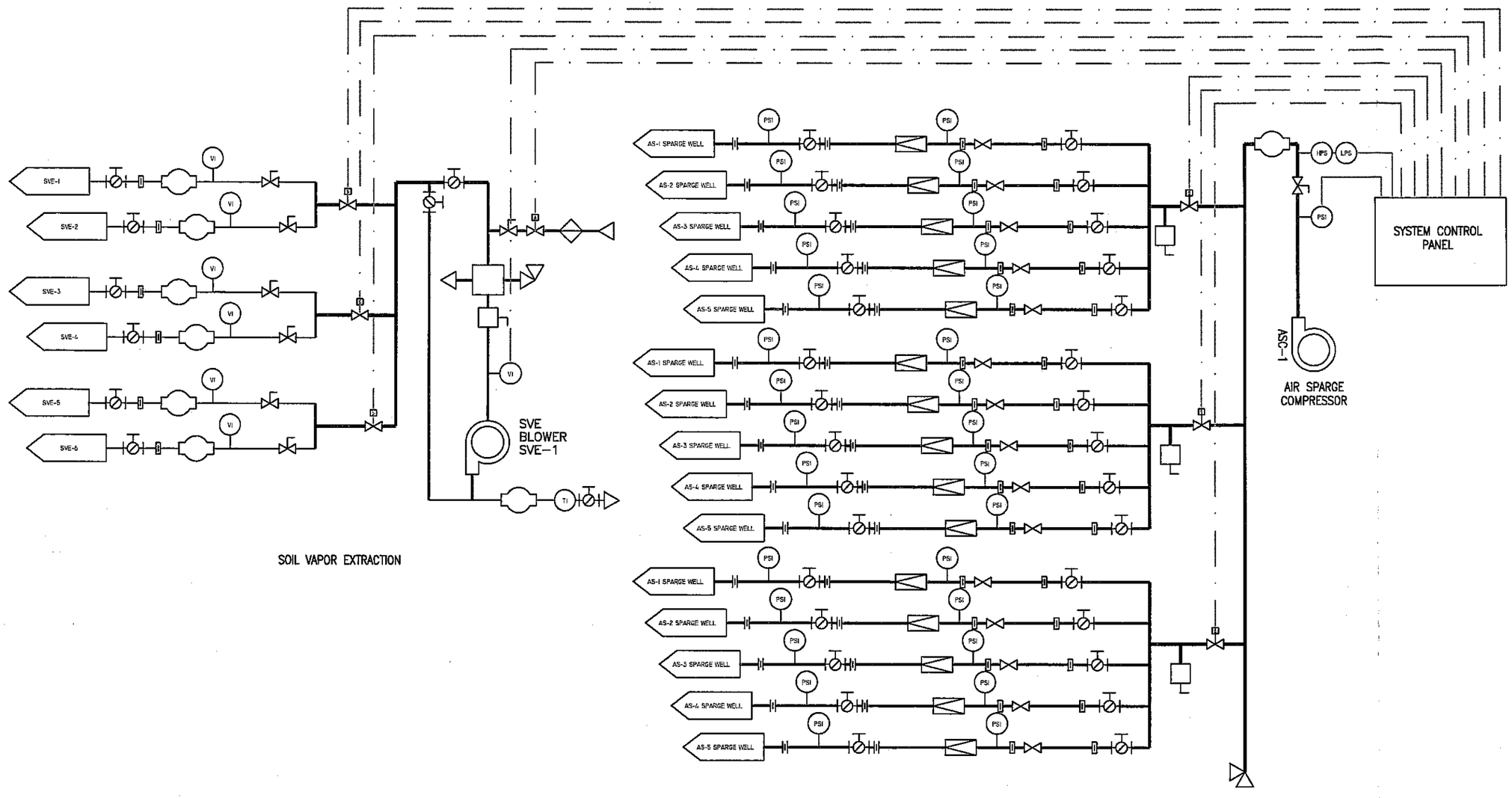

LICENSED PROFESSIONAL ENGINEER
JOHN G. PUCKETT
062-059203
STATE OF ILLINOIS

PREPARED BY:

SECOR
446 EISENHOWER LANE NORTH
LOMBARD, ILLINOIS 60148
PHONE: (630) 792-1680/792-1691 (FAX)

FOR:
AREA 9/10 REMEDIAL DESIGN
SOUTHEAST ROCKFORD GROUNDWATER
CONTAMINATION SUPERFUND SITE
ROCKFORD, ILLINOIS

TITLE:
AIR SPARGE, SOIL VAPOR EXTRACTION, TREATMENT PIPING AND INSTRUMENTATION DIAGRAM

DRAWN BY: JC	DESIGNED BY: JGP
CHECKED BY: KTW	APPROVED BY: DMC/KTW
PROJECT NUMBER: 13UN.02072.04	SCALE: NTS
DATE: 3/28/07	FILE PATH: F:\WORK\AUTOCAD\FIGURES\UTC

SHEET: P2

FINAL DESIGN 100% DESIGN

02072F17.dwg

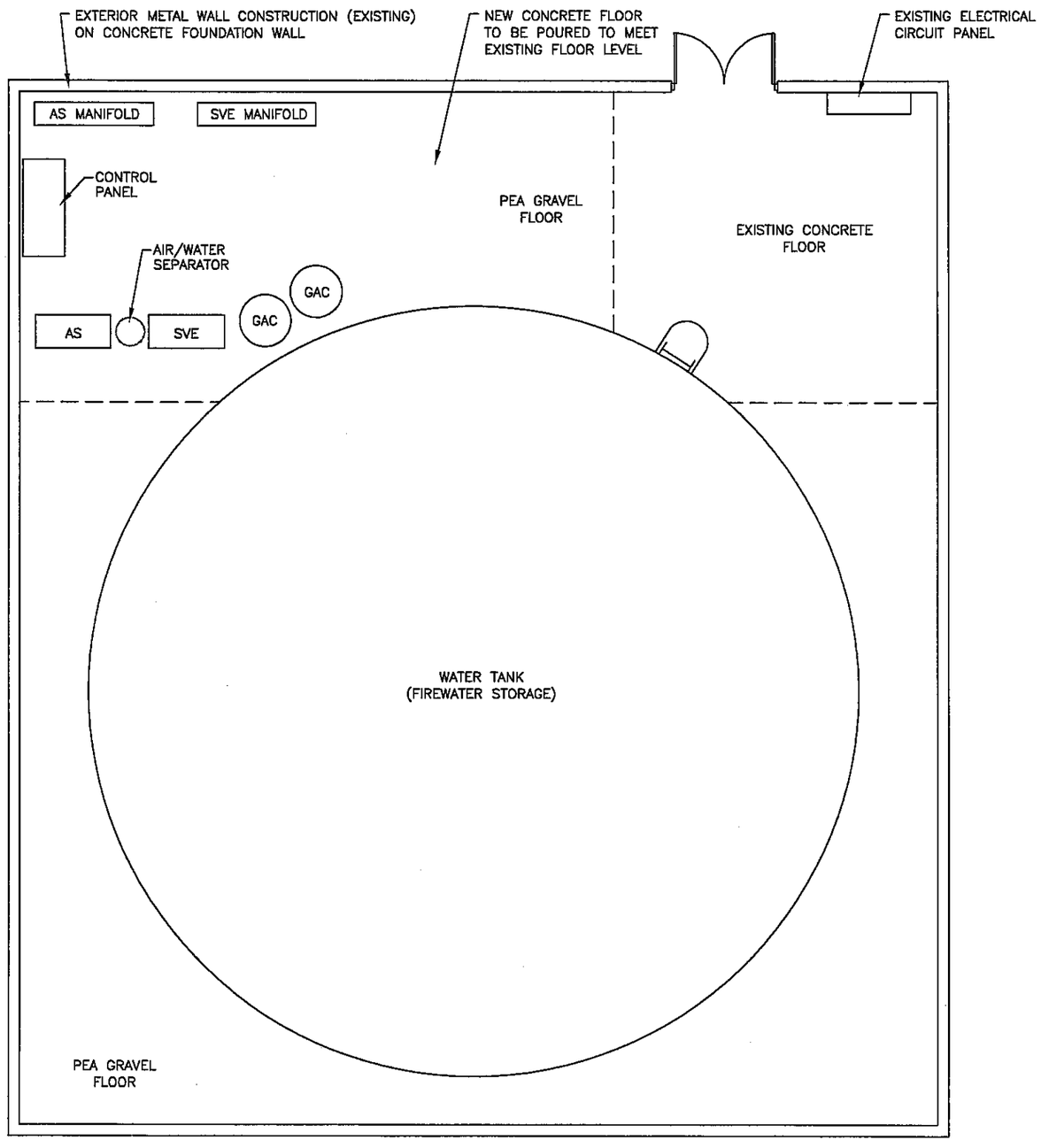

WATER TANK BUILDING

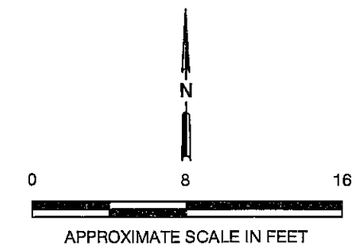

NOTES:

BUILDING DIMENTIONS TO BE OBTAINED FROM FIELD MEASUREMENTS OF THE WATER TANK BUILDING

LICENSED PROFESSIONAL ENGINEER
JOHN G. PUCKETT
062-059203
STATE OF ILLINOIS

PREPARED BY:

SECOR
446 EISENHOWER LANE NORTH
LOMBARD, ILLINOIS 60148
PHONE: (630) 792-1680/792-1691 (FAX)

FOR:

AREA 9/10 REMEDIAL DESIGN
SOUTHEAST ROCKFORD GROUNDWATER CONTAMINATION SUPERFUND SITE
ROCKFORD, ILLINOIS

TITLE:

AIR SPARGE, SOIL VAPOR EXTRACTION, AND AIR TREATMENT PLANT EQUIPMENT LAYOUT

DRAWN BY: JC	DESIGNED BY: JGP
CHECKED BY: KTW	APPROVED BY: DMC/KTW
PROJECT NUMBER: 13UN.02072.04	SCALE: AS SHOWN
DATE: 3/28/07	FILE PATH: F:\WORK\AUTOCAD\FIGURES\UTC

SHEET: M1

FINAL DESIGN 100% DESIGN

02072F17.dwg

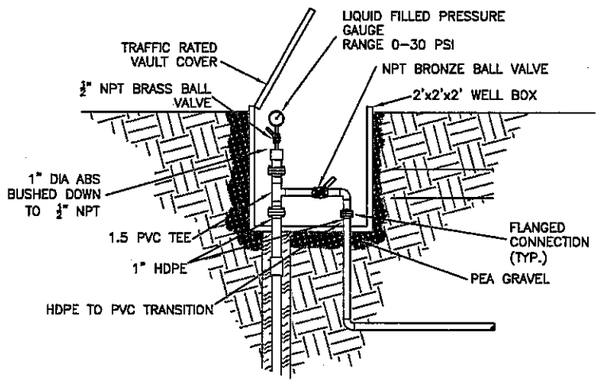

AIR SPARGE WELL HEAD
NOT TO SCALE

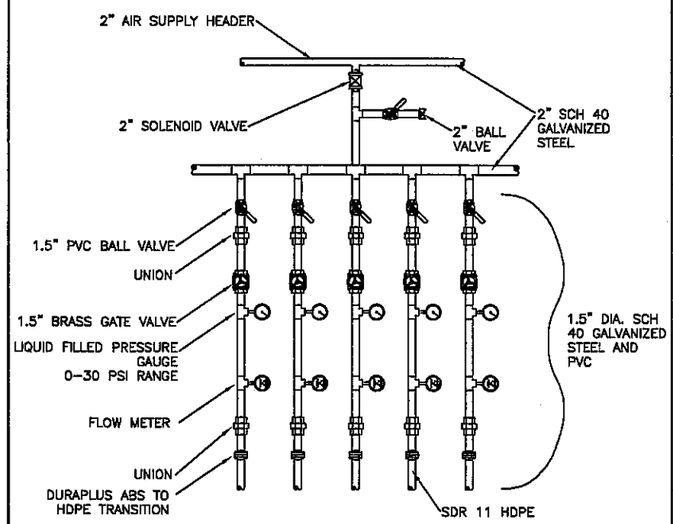

AIR SPARGE MANIFOLD DETAIL
NOT TO SCALE

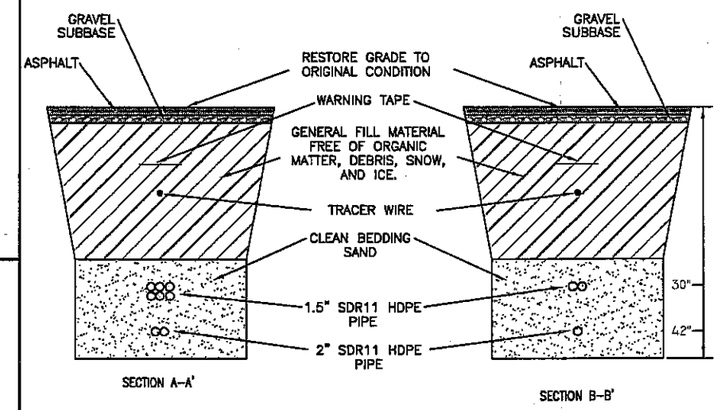

TRENCH DETAIL
NOT TO SCALE

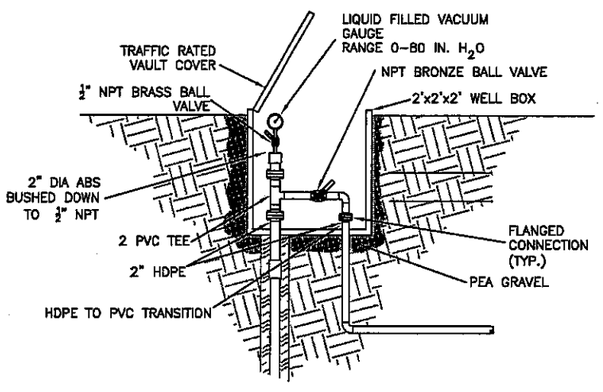

SVE WELL HEAD
NOT TO SCALE

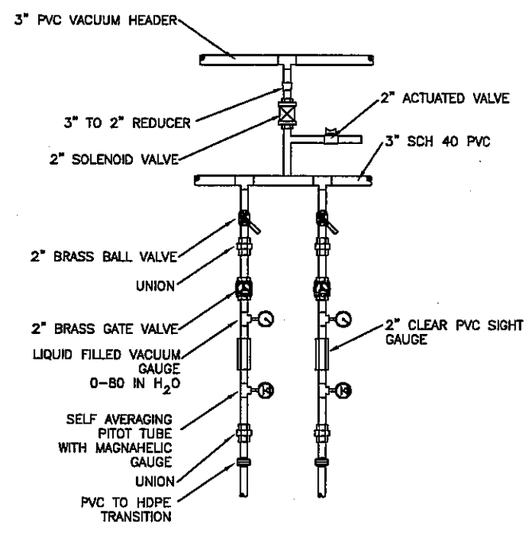

SVE MANIFOLD DETAIL
NOT TO SCALE

FINAL DESIGN 100% DESIGN

LICENSED PROFESSIONAL ENGINEER
JOHN G. PUCKETT
062-059203
STATE OF ILLINOIS

PREPARED BY:

SECOR
446 EISENHOWER LANE NORTH
LOMBARD, ILLINOIS 60148
PHONE: (630) 792-1680/792-1691 (FAX)

FOR:
AREA 9/10 REMEDIAL DESIGN
SOUTHEAST ROCKFORD GROUNDWATER CONTAMINATION SUPERFUND SITE
ROCKFORD, ILLINOIS

TITLE:
AIR SPARGE AND SOIL VAPOR EXTRACTION PIPING DETAILS

DRAWN BY: JC	DESIGNED BY: JGP
CHECKED BY: KTW	APPROVED BY: DMC/KTW
PROJECT NUMBER: 13UN.02072.04	SCALE: AS SHOWN
DATE: 3/28/07	FILE PATH: F:\WORK\AUTOCAD\FIGURES\UTC

SHEET: M2

02072F17.dwg

ONE-LINE DIAGRAM SYMBOLS

- CIRCUIT AND EQUIPMENT INSTALLED BY THIS CONTRACT
- EQUIPMENT ENCLOSURE
- CONTROL OR INTERLOCK CIRCUIT
- CONNECTION
- MOLDED CASE CIRCUIT BREAKER
- FUSE
- FUSED DISCONNECT SWITCH
- CIRCUIT BREAKER
  - ♣ CB MAXIMUM RATING
  - ♠ CONT AMP RATING
  - ♥ T= THERMAL/MAGNETIC F=FUSED
  - ♦ NUMBER OF POLES
- FULL VOLTAGE, NON-REVERSING (FVNR) MAGNETIC MOTOR STARTER
- MANUAL MOTOR STARTER
- AS — AMMETER SWITCH
- VS — VOLTMETER SWITCH
- A — AMMETER
- V — VOLTMETER
- RECEPTACLE-CLASS I, DIVISION 1, GROUPS C, D
- STARTER CONTACTOR
  - ♣ NEMA SIZE /IEC
  - ♦ SCHEMATIC DIAGRAM
  - ♥ M=MAGNETIC / N=MANUAL
  - ♠ FVNR=FULL VOLTAGE NON-REVERSING
  - FVR =FULL VOLTAGE REVERSING
  - RVNR=REDUCED VOLTAGE
  - 2S2W=2 SPEED, 2 WINDING
  - 2S1W=2 SPEED, 1 WINDING
  - VFD= VARIABLE FREQUENCY DRIVE
  - C= CONTACTOR
- FUSED POTENTIAL TRANSFORMERS
- CURRENT TRANSFORMER
- POWER TRANSFORMER
- LIGHTNING OR SURGE ARRESTER
- GROUND CONNECTION
- WHM — WATT-HOUR METER SOCKET. METER FURNISHED BY UTILITY.
- 5 — MOTOR - NUMBER INDICATES HP

PLAN SYMBOLS

- NEW CONSTRUCTION
- EXISTING CONSTRUCTION
- EXISTING CONSTRUCTION TO BE REMOVED
- CONDUIT EXPOSED
- CONDUIT CONCEALED IN WALL CEILING OR HIDDEN FROM VIEW
- CONDUIT CONCEALED IN FLOOR OR UNDERGROUND
- FLEXIBLE CONDUIT (LIQUIDTIGHT)
- GROUND CABLE
- BOLTED GROUND CONNECTION
- WELDED GROUND CONNECTION
- GROUND ROD
- HOMERUN. ARROWHEADS INDICATE NUMBER OF CIRCUITS
- CONDUIT TURNING UP
- CONDUIT TURNING DOWN
- CONDUIT WITH BUSHING
- CONDUIT TERMINATED OR CAPPED
- POWER PANEL-480V, 3ø
- LIGHTING PANEL-120/240V, 1ø OR 208/120V, 3ø
- DISCONNECT (SAFETY) SWITCH
- MS — MANUAL MOTOR STARTER
- MAGNETIC MOTOR STARTER
- COMBINATION MAGNETIC MOTOR STARTER
- 5 — MOTOR-NUMBER INDICATES HP
- P — PULLBOX
- J — JUNCTION BOX
- EXIT LIGHT
- L-1 — FLUORESCENT LUMINAIRE TYPE L-1
- L-1 — INCANDESCENT OR H.I.D. LUMINAIRE TYPE L-1
- EMERGENCY LIGHTING UNIT
- EMERGENCY FLUORESCENT LIGHTING FIXTURE
- DUPLEX RECEPTACLE WP-WEATHERPROOF GFCI-GROUND FAULT CIRCUIT INTERRUPTER
- RECEPTACLE-CLASS I, DIVISION 1, GROUPS C, D
- T — THERMOSTAT
- S — SINGLE POLE SWITCH
- S3 — THREE-WAY SWITCH
- S4 — FOUR-WAY SWITCH

SCHEMATIC DIAGRAM SYMBOLS

- TERMINAL
- CONDUCTOR CONNECTION
- NO CONNECTION
- GROUND
- CONTACT NORMALLY OPEN (NO)
- CONTACT NORMALLY CLOSED (NC)
- SWITCH
- SELECTOR SWITCH
- PUSHBUTTON-NORMALLY OPEN MOMENTARY
- PUSHBUTTON-NORMALLY CLOSED MOMENTARY
- PRESSURE OR VACUUM SWITCH-CLOSES WITH INCREASING PRESSURE OR DECREASING VACUUM
- PRESSURE OR VACUUM SWITCH-OPENS WITH INCREASING PRESSURE OR DECREASING VACUUM
- LIMIT SWITCH NO
- LIMIT SWITCH NO-HELD CLOSED
- LIMIT SWITCH NC
- LIMIT SWITCH NC-HELD OPEN
- NO TIME DELAY CONTACT. TIME DELAY CLOSING AFTER ENERGIZATION
- NC TIME DELAY CONTACT. TIME DELAY OPENING AFTER ENERGIZATION
- NO TIME DELAY CONTACT. TIME DELAY OPENING AFTER DE-ENERGIZATION
- NC TIME DELAY CONTACT. TIME DELAY CLOSING AFTER DE-ENERGIZATION
- M — MOTOR STARTER COIL
- RELAY COIL
- G — INDICATING LIGHT-COLOR INDICATED
  - A-AMBER, R-RED, BL-BLUE, Y-YELLOW, G-GREEN, W-WHITE
- FLOW SWITCH-OPENS WITH INCREASING FLOW
- FLOW SWITCH-CLOSES WITH INCREASING FLOW
- LIQUID LEVEL SWITCH-CLOSES ON RISING LEVEL
- LIQUID LEVEL SWITCH-OPENS ON RISING LEVEL
- TEMPERATURE SWITCH-CLOSES ON RISING TEMPERATURES
- TEMPERATURE SWITCH-OPENS ON RISING TEMPERATURES
- SOLENOID VALVE COIL
- 3 OL — THERMAL OVERLOAD RELAY CONTACT NUMBER INDICATES NUMBER OF CONTACTS
- FUSE
- CONTROL POWER TRANSFORMER (CPT)
- H — HORN
- B — BELL

GENERAL ABBREVIATIONS

A, AUTO	AUTOMATIC	H	HAND	PLC	PROGRAMMABLE LOGIC CONTROLLER
ACK	ACKNOWLEDGE	HI	HIGH	REM	REMOTE
AFF	ABOVE FINISH FLOOR	HS	HIGH SPEED	REV	REVERSE
AFG	ABOVE FINISH GRADE	IL	INDICATING LIGHT	SOL	SOLENOID (OTHER THAN VALVE)
BC	BARE COPPER	INST	INSTANTANEOUS	SP	SPARE
C	CONDUIT	L	LOW	SS	SELECTOR SWITCH
CB	CIRCUIT BREAKER	LOC	LOCAL	SV	SOLENOID VALVE
CL	CLOSE	LS	LOW SPEED	T, T-STAT	THERMOSTAT
CPT	CONTROL POWER TRANSFORMER	MAN	MANUAL	TDAE	TIME DELAY AFTER ENERGIZATION
CR	CONTROL RELAY	MCC	MOTOR CONTROL CENTER	TDAD	TIME DELAY AFTER DE-ENERGIZATION
CS	CONTROL SWITCH	NC	NORMALLY CLOSED	TDR	TIME DELAY RELAY
CT	CURRENT TRANSFORMER	NL	NIGHT LIGHT (UNSWITCHED FIXTURE)	TEMP	TEMPERATURE
DWG	DRAWING	NO	NORMALLY OPEN	TMR	TIMER
ETM	ELAPSED TIME METER	O	OFF	WP	WEATHERPROOF
FU	FUSE	OL	THERMAL OVERLOAD RELAY	XFMR	TRANSFORMER
FWD	FORWARD	OP	OPEN	XP	EXPLOSIONPROOF-CLASS I, DIVISION I, GROUPS C, D
GND	GROUND	PB	PUSHBUTTON		

FINAL DESIGN 100% DESIGN

LICENSED PROFESSIONAL ENGINEER
JOHN G. PUCKETT
062-059203
STATE OF ILLINOIS

PREPARED BY:

SECOR
446 EISENHOWER LANE NORTH
LOMBARD, ILLINOIS 60148
PHONE: (630) 792-1680/792-1691 (FAX)

FOR:

AREA 9/10 REMEDIAL DESIGN
SOUTHEAST ROCKFORD GROUNDWATER CONTAMINATION SUPERFUND SITE
ROCKFORD, ILLINOIS

TITLE:

ELECTRICAL SYMBOLS LEGEND

DRAWN BY: JC	DESIGNED BY: JGP
CHECKED BY: KTW	APPROVED BY: DMC/KTW
PROJECT NUMBER: 13UN.02072.04	SCALE: NTS
DATE: 3/28/07	FILE PATH: F:\WORK\AUTOCAD\FIGURES\UTC

SHEET: E1

02072F17.dwg

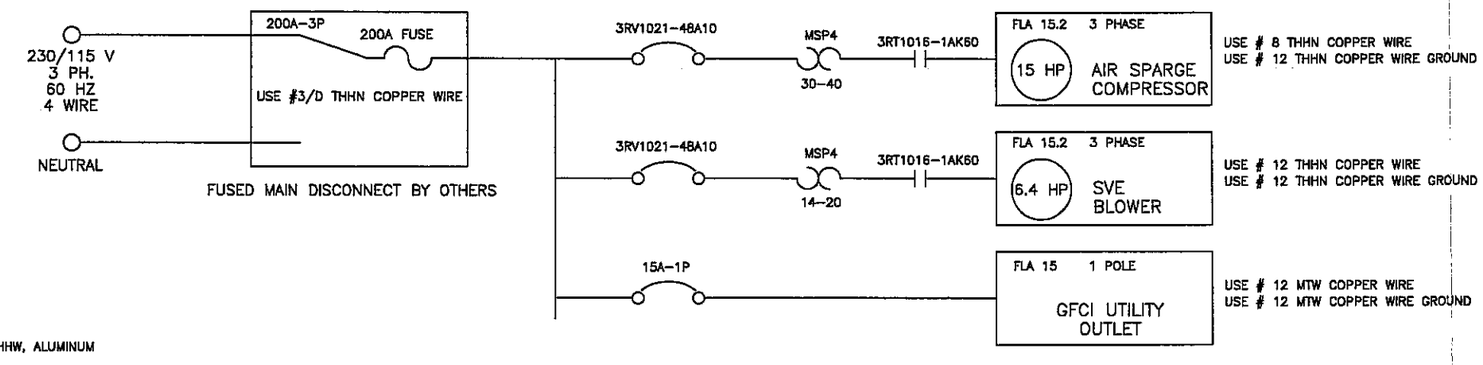

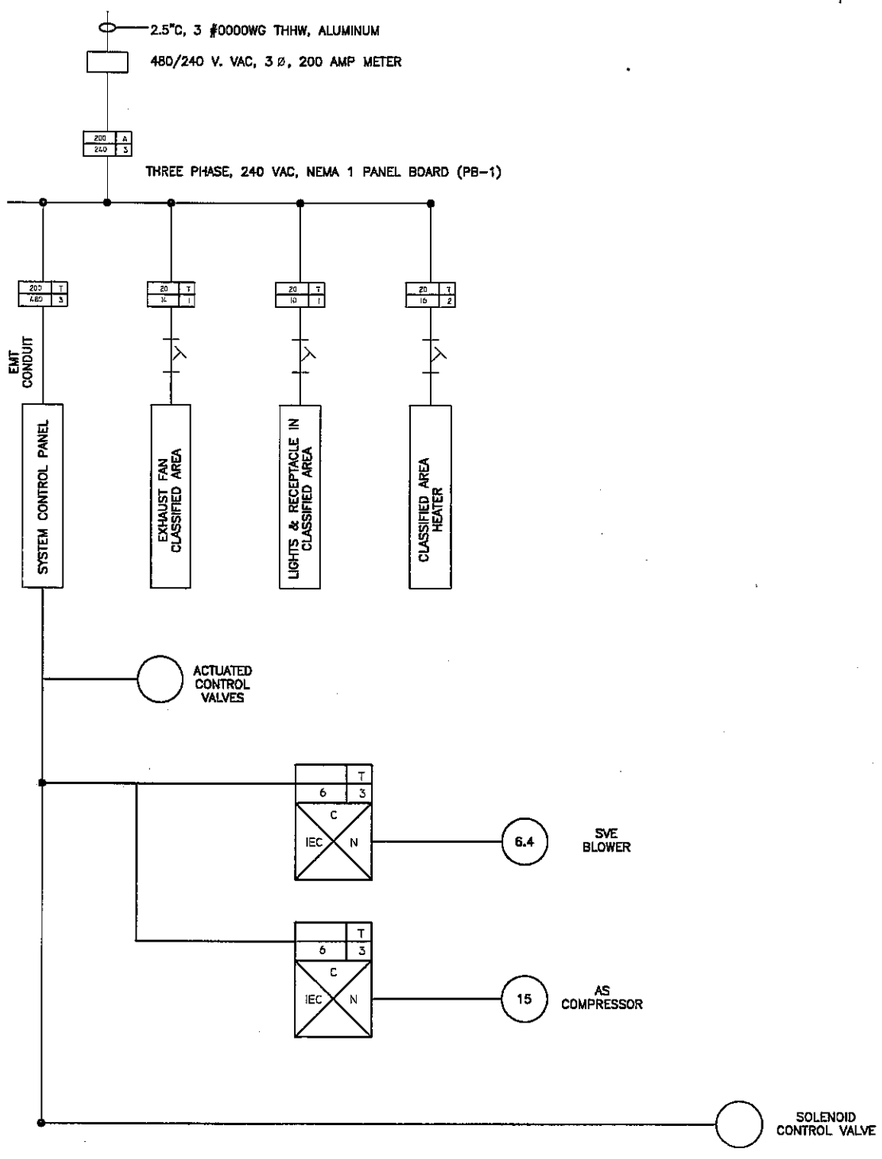

FINAL DESIGN 100% DESIGN

LICENSED PROFESSIONAL ENGINEER
JOHN G. PUCKETT
062-059203
STATE OF ILLINOIS

NOTES:

1.) ALL INSTRUMENTATION TO BE CONNECTED TO CONTROL PANEL USING 1/2" EMT CONDUITS WITH SEAL-OFFS

2.) SEAL-OFFS TO BE POURED AFTER FINAL INSPECTION

PREPARED BY:
SECOR
446 EISENHOWER LANE NORTH
LOMBARD, ILLINOIS 60148
PHONE: (630) 792-1650/792-1691 (FAX)

FOR:
AREA 9/10 REMEDIAL DESIGN
SOUTHEAST ROCKFORD GROUNDWATER CONTAMINATION SUPERFUND SITE
ROCKFORD, ILLINOIS

TITLE:
ELECTRICAL ONE-LINE DIAGRAM

DRAWN BY: JC	DESIGNED BY: JGP
CHECKED BY: KTW	APPROVED BY: DMC/KTW
PROJECT NUMBER: 13UN.02072.04	SCALE: NTS
DATE: 3/28/07	FILE PATH: F:\WORK\AUTOCAD\FIGURES\UTC

SHEET: E2

02072F17.dwg

APPENDIX A

Air Sparge System Design Calculations

Air Sparge Injection Pressure Calculation

Minimum Injection Pressure:

P_{min} (psgi) = 0.43 H_h + $P_{packing}$ + $P_{formation}$ + $P_{friction\ loss}$

Where:

H_h = depth below the water table to the top of the injection well screen - the hydrostatic head
= depth of treatment zone + 5 feet (additional design factor)
= 22 ft

$P_{packing}$ = air entry pressures for the well annulus packing material
= 0.2 psig (estimated)

$P_{formation}$ = air entry pressure for the formation
= 0.2 psig (estimated for sand)

$P_{friction}$ = pressure loss due to friction calculated using Darcy-Weisbach equation (worksheet is attached)
= 0.524 psi

P_{min} = 0.43 (22 ft) + 0.2 + 0.2 + 0.524
= 10.38 psi

Maximum Inlet Pressure:

$P_{fracture}$ (psig) = 0.73 D

Where:

D = depth below ground surface to the top of the air injection well screened interval
= 53 ft

$P_{fracture}$ = 0.73 (53 ft)
= 38.69 psi

Source of Equations: A. Leeson, et al. 2002. *Air Sparging Design Paradigm*. Battelle. Columbus, Ohio. 12 August 2002.

Compressible Flow Pressure Loss Results	Piping, Valves, and Fittings	
Pressure Loss (psi): 0.524		
Job Number: 13UN.02072 **Client:** UTC **Date:** 6/19/06 **Line Number:** **Fluid:** Air **Nominal Pipe Size:** 1.5 **Pipe Schedule:** SCH 40 **Flow Rate:** 20 ACFM **Viscosity (cP):** 0.018 **Inlet Pressure (PSIG):** 17 **Temperature (F):** 80 **Pipe Roughness (ft):** 0.00021 **Actual Pipe ID (in.):** 1.61 **Fluid Velocity (ft/sec):** 23.59 **Reynolds Number:** 41513 **Flow Region:** Turbulent **Friction Factor:** 0.026 **Pressure Loss (psi):** 0.524 **Net Expansion Factor:** 0.993 **Inlet Mach Number:** 0.021 **Outlet Mach Number:** 0.021 **Density at Inlet:** 0.159 **Specific Volume at Inlet:** 6.303 **K1:** 1657.64 **K2:** 1603.14 **Overall K:** 54.51 **Specific Heat Ratio:** 1.4 **M iterations:** 167 **Friction Factor iterations:** 4	**Piping Length (ft):** 265 **Long Radius Elbows:** 2 **Short Radius Elbows:** 2 **5 Diameter Elbows:** 0 **45 degree Elbows :** 2 **Standard 90 degreeThreaded Elbows:** 0 **45 degree Standard Elbows :** 0 **Tee Flow Through:** 1 **Tee Flow Branch :** 0 **Gate:** 1 **Globe :** 0 **Swing Check:** 0 **Lift Check :** 0	**3 Way Plug :** 0 **Ball :** 2 **Plug:** 0 **Butterfly 2in. to 8in. :** 0 **Butterfly 10in. to 14in. :** 0 **Butterfly Greater Than 14in. :** 0 **Angle Valve Flow Up:** 0 **Angle Valve Flow Down :** 0 **Pipe Entrance:** 1 **Pipe Exit :** 0 **No. of Reducers:** 0 **Reducer Outlet Size (in) :** 0 **No. of Increasers:** 0 **Increaser Outlet Size (in) :** 0

PROJECT DATA

Job Number: 13UN.02072 Client: UTC Date: 6/19/06

Line Number: Fluid: Air

FLUID AND PIPING

None of these fields can be left blank, enter 0 if necessary

Nominal Pipe Size:	1.5	
Pipe Schedule:	SCH 40	
Piping Material:	PVC PIPE	
Flow Rate:	20	ACFM
Viscosity (cP):	0.018	**Typical Values**
Temperature (F):	80	
Gas Molecular Weight:	29	
Specific Heat Ratio:	1.4	**Typical Values**
Compressibility Factor:	1	
Inlet Pressure (PSIG):	17	
Piping Length (ft):	265	

VALVES AND FITTINGS

None of these fields can be left blank, enter 0 if necessary

Flanged or Butt-Welded Elbows

2 Long Radius Elbows | 2 Short Radius Elbows | 0 5 Diameter Elbows | 2 45 Degree Elbows

Threaded Elbows

0 90 Degree Elbows | 0 45 degree Elbows

Tees

1 Tee Flow Through | 0 Tee Flow Branch

Valves

1 Gate	0 Globe	0 Swing Check	0 Lift Check	0 3 Way Plug
2 Ball	0 Plug	0 Butterfly 2in. to 8in.	0 Butterfly 10in. to 14in.	0 Butterfly Greater Than 14in.
0 Angle Valve Flow Up	0 Angle Valve Flow Down			

Entrance and Exits

1 Pipe Entrance 0 Pipe Exit

Reducers and Increasers

0 No. of Increasers 0 Increaser Outlet Size (in)

0 No. of Reducers 0 Reducer Outlet Size (in)

APPENDIX B

Air Sparge System Equipment Specifications

Data

Rietschle Thomas
A Thomas Industries Company

Compressors | Compresores | Compresseurs | Compressores

DTB (06)

MACRO

DTB 180 (06)
DTB 250 (06)
DTB 340 (06)

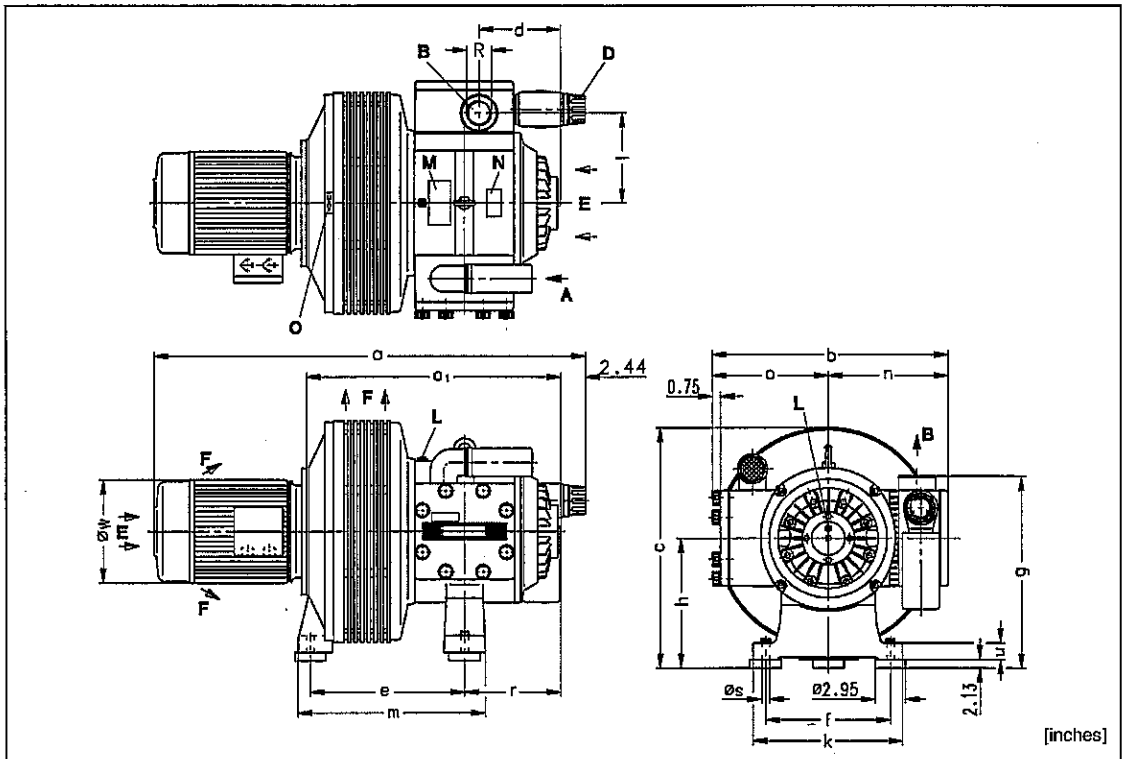

A	Suction	Succión	Aspiration	Sucção
B	Pressure connection	Conexión presión	Raccord surpression	Conexão da pressão
D	Pressure regulating valve	Válvula reguladora de presión	Valve de réglage pression	Válvula de regulagem da pressão
E	Cooling air entry	Entrada aire refrigerante	Entrée air refroidissement	Entrada do ar refrigerante
F	Cooling air exit	Salida aire refrigerante	Sortie air refroidissement	Saída do ar refrigerante
L	Greasing points	Puntos de engrase	Points de graissage	Pontos de lubrificação
M	Greasing label	Rótulo engrase	Etiquette graissage	Rótulo da lubrificação
N	Data plate	Placa fecha	Etiquette caractéristique	Placa da data
O	Rotation arrow	Dirección de rotación	Flèche sens rotation	Direção da rotação

DTB (06)			180			250			340		
kw		50 Hz	5.5	7.5	11	7.5	11	15	15	18.5	22
hp		60 Hz	-	15	20	15	20	25	25	30	40
[inches]	a	50 Hz	45.35	50.94		50.94		52.56	54.41	56.38	
		60 Hz	-	54.20		54.20		56.74	57.21		59.94
	a_1	50 Hz	26.97	28.15		28.15			29.21		
		60 Hz	-	28.38		28.38		29.02	29.49		30.28
	b		22.36			22.36			27.72		
	c		26.73			26.73			32.44		
	d		7.80			7.80			7.80		
	e	50 Hz	16.10			16.10			16.97		
		60 Hz	-	16.10		16.10			16.97		
	f		11.81			11.81			19.69		
	g		20.79			20.79			25.43		
	h		16.30			16.30			19.45		
	k		14.17			14.17			22.05		
	l		8.50			8.50			10.55		
	m		19.25			19.25			20.83		
	n / o		11.50 / 10.87			11.50 / 10.87			14.21 / 13.50		
	r		10.55			10.55			10.55		
	øs		0.71			0.71			0.79		
	u		1.57			1.57			1.97		
	øw	50 Hz	9.69	12.28		12.28		14.17	14.17		
		60 Hz	-	14.60		14.60		16.65	16.65		19.25
	R		2" NPT			2" NPT			3" NPT		

DA 367/1

2.5.2002

Rietschle Thomas
Hanover Inc.
7222 Parkway Drive
HANOVER, MD 21076
USA
☎ 410-712-4100
Fax 410-712-4148
E-Mail:
sales@vacuumpumps.com
http://
www.vacuumpumps.com

DTB (06)		180			250			340		
cfm	50 Hz	103			147			206		
	60 Hz	123			177			247		
psig	50 Hz	11.6	20.3	29.0	12.3	23.2	29.0	14.5	23.2	26.1
	60 Hz	-	23.9	29.0	16.7	24.7	29.0	15.2	22.5	26.1
3~	50 Hz	400/690V ± 10%								
	60 Hz	230/460V ± 10%								
kw	50 Hz	5.5	7.5	11	7.5	11	15	15	18.5	22
hp	60 Hz	-	15	20	15	20	25	25	30	40
A	50 Hz	14.5/8.4	17.5/10	24.0/14	17.5/10	24.0/14	30/17.5	30/17.5	43/24.8	42.5/24.5
	60 Hz	-	41/20.5	54/27	41/20.5	54/27	69/34.5	69/34.5	74/37	102/51
rpm	50 Hz	950								
	60 Hz	1140								
dB(A)	50 Hz	74		75	74		75	77		78
	60 Hz	77		78	77		78	82		83
lbs	50 Hz	518	584	617	573	606	673	948	1036	1235
	60 Hz	-	753	785	742	774	921	1197	1240	1396

ZRK		50 (03)			50 (03)			80 (03)		
ZAF		65 (50)			65 (50)			80 (50)		
ZMS / ZAD / ZBX		#	#	#	#	#	#	#	#	#

cfm	Capacity	Capacidad	Volume engendré	Capacidade
psig	Excess pressure	Exceso de presión	Surpression	Pressão excessiva
3~	Motor version	Versión motor	Exécution moteur	Versão do motor
kw / hp	Motor rating	Datos motor	Puissance moteur	Potência do motor
A	Full load amperage	Amperaje de plena carga	Intensité absorbée	Amperagem da carga total
rpm	Speed	Velocidad	Vitesse rotation	Velocidade
dB(A)	Average noise level	Nivel de ruido medio	Niveau sonore moyen	Nível médio de ruído
lbs	Weight	Peso	Poids	Peso
	Accessories	Accesorios	Accessoires	Acessórios
ZRK	Non return valve	Válvula retención	Clapet anti-retour	Válvula sem retorno
ZAF	Suction filter	Filtro succión	Filtre d'aspiration	Filtro de sucção
ZMS	Motor starter	Arranque motor	Disjoncteur moteur	Arranque do motor
ZAD	Soft starter	Soft starter	Démarrage progressif	Soft starter
ZBX	Sound box	Caja de sonido	Caisson insonorisant	Canópia

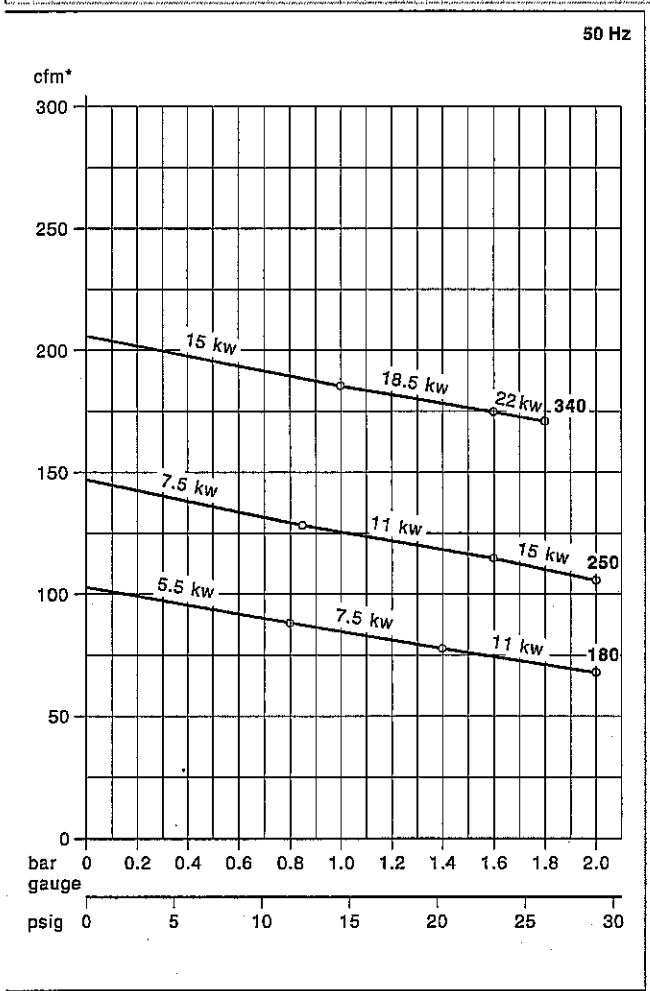

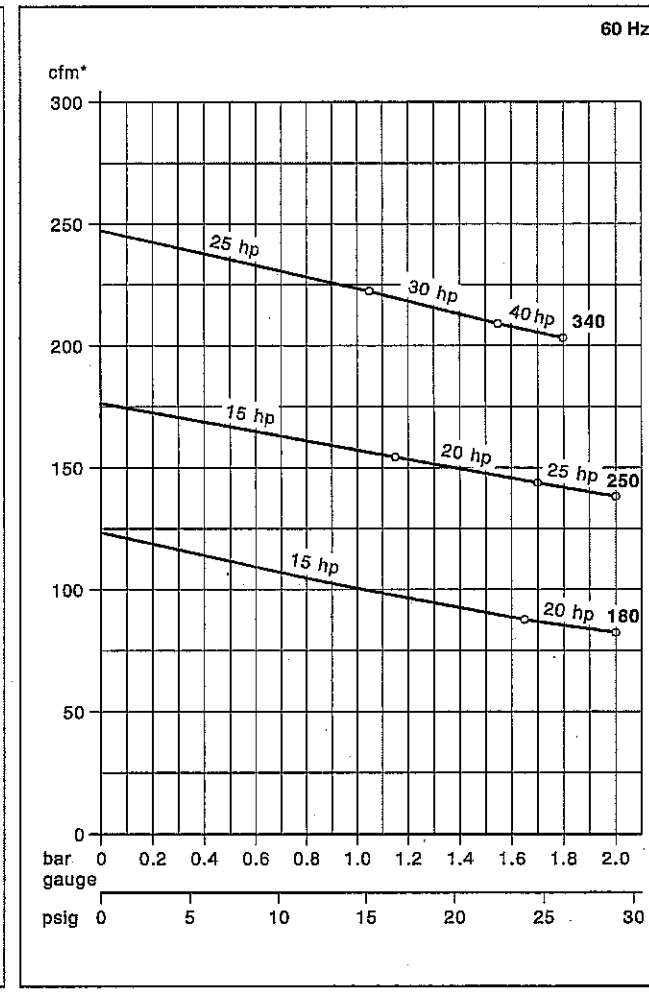

* Capacity refers to free air at 1 standard atmosphere and 20° C (68° F)./ La capacidad se refiere al aire libre a 1 atmosfera estandár de presión y a 20° C (68° F) de temperatura./ Le débit est mesuré à l'atmosphère de 1 bar (abs.) à 20° C (68° F)./ A capacidade refere-se ao ar livre a uma atmosfera padrão 1 e a 20° C (68° F).

Curves and tables refer to compressor at normal operating temperature./ Las curvas y las tablas se refieran al compresor a la temperatura normal de operación./ Les courbes et tableaux sont établies, compresseur à température de functionnement./ As curvas e tabelas referem-se ao compressor a temperatura normal de operação.

Technical information is subject to change without notice!/ La información técnica está sujeta a cambios sin previo aviso!/ Sous réserve de modification technique./ A informação técnica está sujeita a mudança sem aviso prévio!

on request # on pedido # sur demande # a pedido

The listed values for a, ø w and full load amperage may vary because of different motor manufacturers./ Los valores listados para a, ø w y para el amperaje de carga completa pueden variar para distintos fabicantes de motores./ Les dimensions a et ø w ainsi que l'ampérage peuvent différer des données indiquées, ci-dessus, selon le fabricant du moteur./ Como variam os fabricantes de motores, poderá haver variação dos valores indicados para a, ø w e para uma amperagem da carga total.

Data

Rietschle Thomas
A Thomas Industries Company

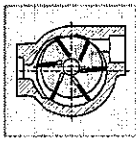

Compressors | Compresores | Compresseurs | Compressores

DTB (36)

MACRO

DTB 180 (36)
DTB 250 (36)
DTB 340 (36)

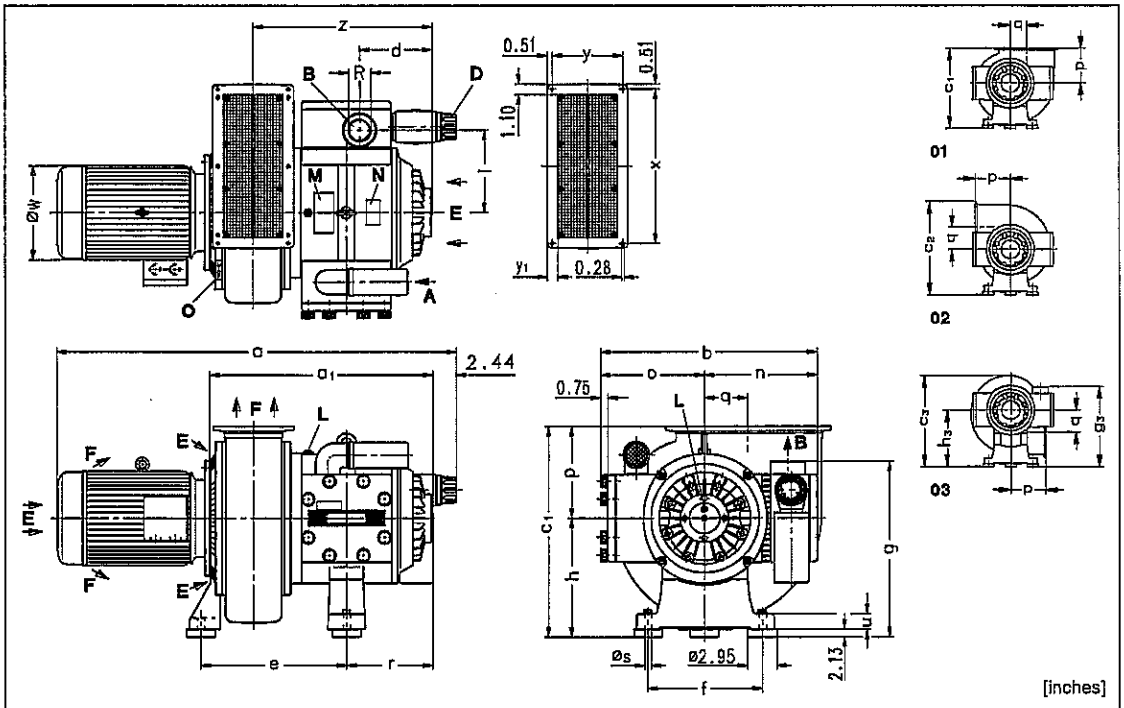

01-03	Connection positions	Posiciones conexión	Positions raccordement	Posições de conexão
01	Standard version	Versión estándar	Exécution standard	Versão padronizada
A	Suction	Succión	Aspiration	Sucção
B	Pressure connection	Conexión presión	Raccord surpression	Conexão da pressão
D	Pressure regulating valve	Válvula reguladora de presión	Valve de réglage pression	Válvula de regulagem da pressão
E	Cooling air entry	Entrada aire refrigerante	Entrée air refroidissement	Entrada do ar refrigerante
F	Cooling air exit	Salida aire refrigerante	Sortie air refroidissement	Saída do ar refrigerante
L	Greasing points	Puntos de engrase	Points de graissage	Pontos de lubrificação
M	Greasing label	Rótulo engrase	Etiquette graissage	Rótulo da lubrificação
N	Data plate	Placa fecha	Etiquette caractéristique	Placa da data
O	Rotation arrow	Dirección de rotación	Flèche sens rotation	Direção da rotação

DTB (36)			180			250			340		
kw		50 Hz	5.5	7.5	11	7.5	11	15	15	18.5	22
hp		60 Hz	-	15	20	15	20	25	25	30	40
[inches]	a	50 Hz	44.69	50.75		50.75		53.15	53.90	55.87	
		60 Hz	-	53.25		53.25		55.79	56.95		59.54
	a_1	50 Hz	26.30	27.95		27.95			28.70		
		60 Hz	-	27.43		27.43		28.07	29.23		29.88
	b		22.36			22.36			27.72		
	c_1		25.75			25.75			31.26		
	c_2		29.57			29.57			35.87		
	c_3 / d		25.63 / 7.80			25.63 / 7.80			31.34 / 7.80		
	e	50 Hz	16.61			16.61			17.87		
		60 Hz	-	16.61		16.61			17.87		
	f		11.81			11.81			19.69		
	g		20.79			20.79			25.43		
	h		16.30			16.30			19.45		
	g_3 / h_3		20.83 / 16.30			20.83 / 16.30			25.47 / 19.45		
	l		8.50			8.50			10.55		
	n / o		11.50 / 10.87			11.50 / 10.87			14.21 / 13.50		
	p / q		9.45 / 4.80			9.45 / 4.80			11.81 / 6.18		
	r		10.55			10.55			10.55		
	øs / u		0.79 / 1.57			0.79 / 1.57			0.79 / 1.97		
	øw	50 Hz	9.69	12.28		12.28		14.17	14.17		
		60 Hz	-	14.60		14.60		16.65	16.65		19.25
	x		15.91			15.91			19.45		
	y / y_1		7.24 / 1.10			7.24 / 1.10			8.62 / 1.22		
	z		21.81			21.81			22.48		
	R		2" NPT			2" NPT			3" NPT		

DA 367/2

2.5.2002

Rietschle Thomas
Hanover Inc.
7222 Parkway Drive
HANOVER, MD 21076
USA
☎ 410-712-4100
Fax 410-712-4148
E-Mail:
sales@vacuumpumps.com
http://
www.vacuumpumps.com

DTB (36)		180			250			340		
cfm	50 Hz	103			147			206		
	60 Hz	123			177			247		
psig	50 Hz	11.6	20.3	29.0	12.3	23.2	29.0	14.5	23.2	26.1
	60 Hz	-	23.9	29.0	16.7	24.7	29.0	15.2	22.5	26.1
3~	50 Hz	400/690V ± 10%								
	60 Hz	230/460V ± 10%								
kw	50 Hz	5.5	7.5	11	7.5	11	15	15	18.5	22
hp	60 Hz	-	15	20	15	20	25	25	30	40
A	50 Hz	14.5/8.4	17.5/10	24.0/14	17.5/10	24.0/14	30/17.5	30/17.5	43/24.8	42.5/24.5
	60 Hz	-	41/20.5	54/27	41/20.5	54/27	69/34.5	69/34.5	74/37	102/51
rpm	50 Hz	950								
	60 Hz	1140								
dB(A)	50 Hz	74		75	74		75	77		78
	60 Hz	77		78	77		78	82		83
lbs	50 Hz	529	595	628	584	617	684	970	1058	1257
	60 Hz	-	764	796	753	785	932	1219	1262	1418

ZRK		50 (03)			50 (03)			80 (03)		
ZAF		65 (50)			65 (50)			80 (50)		
ZMS / ZAD / ZBX		#	#	#	#	#	#	#	#	#

cfm	Capacity	Capacidad	Volume engendré	Capacidade
psig	Excess pressure	Exceso de presión	Surpression	Pressão excessiva
3~	Motor version	Versión motor	Exécution moteur	Versão do motor
kw / hp	Motor rating	Datos motor	Puissance moteur	Potência do motor
A	Full load amperage	Amperaje de plena carga	Intensité absorbée	Amperagem da carga total
rpm	Speed	Velocidad	Vitesse rotation	Velocidade
dB(A)	Average noise level	Nivel de ruido medio	Niveau sonore moyen	Nível médio de ruído
lbs	Weight	Peso	Poids	Peso
	Accessories	Accesorios	Accessoires	Acessórios
ZRK	Non return valve	Válvula retención	Clapet anti-retour	Válvula sem retorno
ZAF	Suction filter	Filtro succión	Filtre d'aspiration	Filtro de sucção
ZMS	Motor starter	Arranque motor	Disjoncteur moteur	Arranque do motor
ZAD	Soft starter	Soft starter	Démarrage progressif	Soft starter
ZBX	Sound box	Caja de sonido	Caisson insonorisant	Canópia

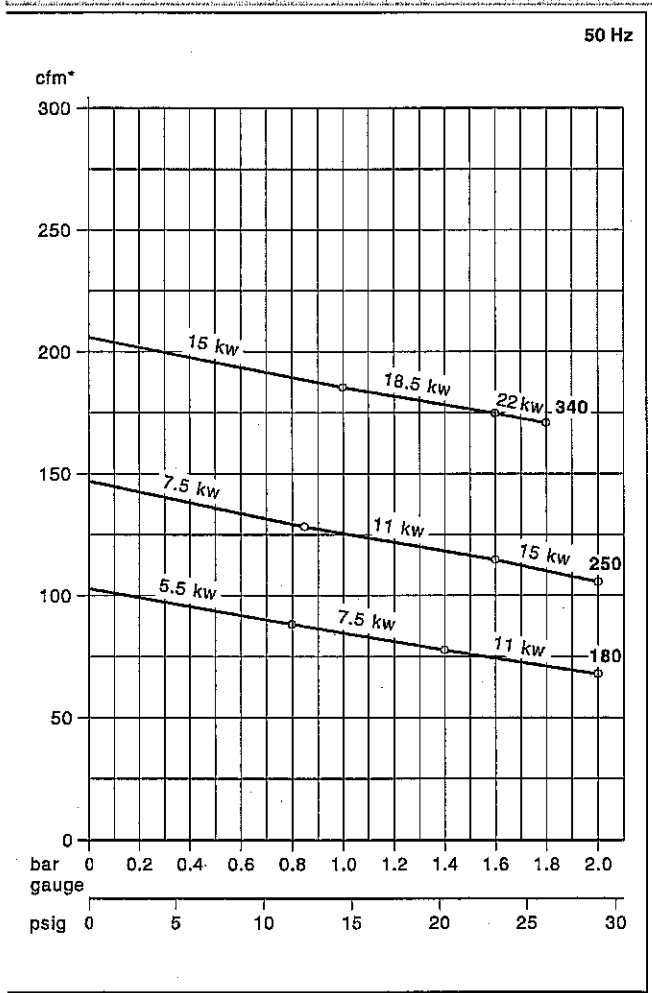

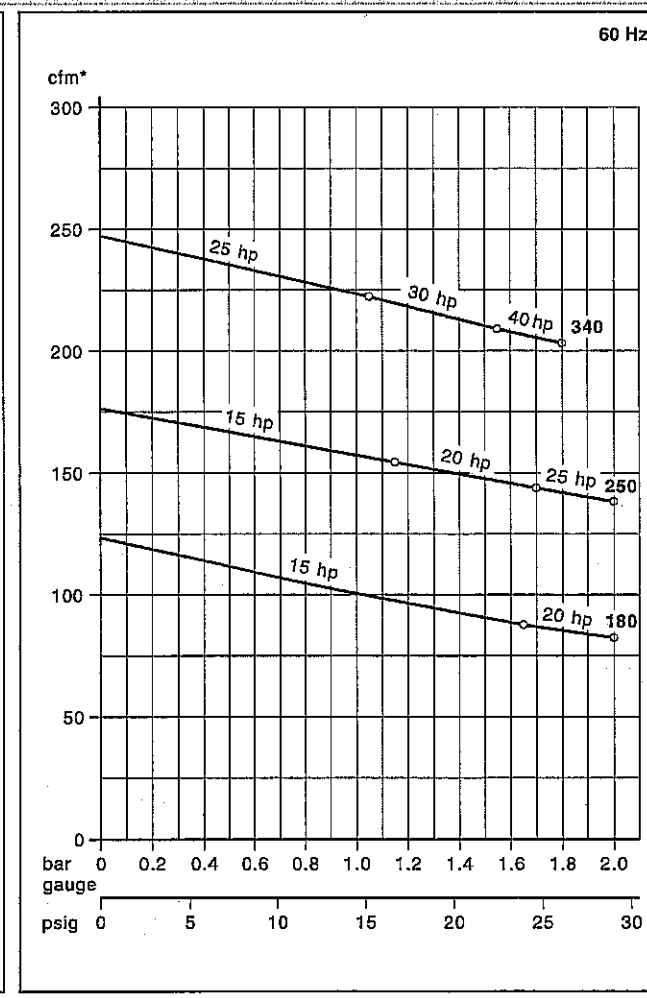

* Capacity refers to free air at 1 standard atmosphere and 20° C (68° F)./ La capacidad se refiere al aire libre a 1 atmosfera estandár de presión y a 20° C (68° F) de temperatura./ Le débit est mesuré à l'atmosphère de 1 bar (abs.) à 20° C (68° F)./ A capacidade refere-se ao ar livre a uma atmosfera padrão 1 e a 20° C (68° F).

Curves and tables refer to compressor at normal operating temperature./ Las curvas y las tablas se refieran al compresor a la temperatura normal de operación./ Les courbes et tableaux sont établies, compresseur à température de functionnement./ As curvas e tabelas referem-se ao compressor a temperatura normal de operação.

Technical information is subject to change without notice!/ La información técnica está sujeta a cambios sin previo aviso!/ Sous réserve de modification technique./ A informação técnica está sujeita a mudança sem aviso prévio! # on request # on pedido # sur demande # a pedido

The listed values for a, ø w and full load amperage may vary because of different motor manufacturers./ Los valores listados para a, ø w y para el amperaje de carga completa pueden variar para distintos fabicantes de motores./ Les dimensions a et ø w ainsi que l'ampérage peuvent différer des données indiquées, ci-dessus, selon le fabricant du moteur./ Como variam os fabricantes de motores, poderá haver variação dos valores indicados para a, ø w e para uma amperagem da carga total.

APPENDIX C

Soil Vapor Extraction System Design Calculations

Soil Vapor Extraction System Design Calculations

Radius of Influence from pilot test results ≈ 50 ft @ 20" H_2O and 72 acfm

Target treatment zone 8 ft in length

Pore Volume Exchange Time:

$E = (\epsilon V) / Q$

Where:

ϵ = soil porosity = 0.35 for sand

V = volume of soil to be treated

$= \pi (R^2) \cdot D = \pi (50 \text{ ft})^2 \cdot 8 \text{ ft} = 6.28 \times 10^4 \text{ ft}^3$

$E = [(0.35)(6.28 \times 10^4 \text{ ft}^3)] / 72 \text{ acfm} = 305 \text{ min} = 5.08 \text{ hrs} = 5 \text{ hrs}$

Estimated Number of SVE Extraction Wells Required per Treatment Cell

$N = (\text{Treatment Area}) / \pi \cdot (\text{Roi})^2$

Where:

Treatment Area = Length of treatment area • Diameter of air sparge radius of influence

Roi = Radius of Influence from pilot test results ≈ 50 ft @ 20" H_2O and 72 acfm

$N = (30 \text{ ft} \cdot 150 \text{ ft}) / \pi (50 \text{ ft})^2$

$= 0.57 = 1$

Note: The above calculation does not account for the geometry of the treatment area. In the above equation, the influence area of the vertical SVE well is assumed to be circular. The design treatment area is a rectangle which is three times longer than it is wide. Due to the elongated shape of the treatment area, an additional extraction well per treatment cell will be necessary to completely capture air sparge generated soil vapors. The treatment system design specifies two vapor extraction wells per treatment cell. The extraction well layout is shown in Drawing Y5.

Source of Equations: U.S. EPA, *How to Evaluate Cleanup Technologies for Underground Storage Tank Sities: A Guide for Corrective Action Plan Reviewers*, EPA 510-B-94-003, October 1994

Compressible Flow Pressure Loss Results

Piping, Valves, and Fittings

Pressure Loss (psi): 1.19

Job Number: 13UN.02072
Client: UTC - Hamilton Sundstrand
Date: 6/21/06
Line Number:
Fluid:
Nominal Pipe Size: 2
Pipe Schedule: SCH 40
Flow Rate: 100 ACFM
Viscosity (cP): 0.018
Inlet Pressure (PSIG): 0
Temperature (F): 70
Pipe Roughness (ft): 0.000005
Actual Pipe ID (in.): 2.067
Fluid Velocity (ft/sec): 71.56
Reynolds Number: 76387
Flow Region: Turbulent
Friction Factor: 0.0192
Pressure Loss (psi): 1.19
Net Expansion Factor: 0.975
Inlet Mach Number: 0.063
Outlet Mach Number: 0.069
Density at Inlet: 0.075
Specific Volume at Inlet: 13.34
K1: 172.29
K2: 144.85
Overall K: 27.43
Specific Heat Ratio: 1.4
M iterations: 162
Friction Factor iterations: 4

Piping Length (ft): 225
Long Radius Elbows: 2
Short Radius Elbows: 2
5 Diameter Elbows: 0
45 degree Elbows : 0
Standard 90 degreeThreaded Elbows: 0
45 degree Standard Elbows : 0
Tee Flow Through: 1
Tee Flow Branch : 0
Gate: 1
Globe : 0
Swing Check: 0
Lift Check : 0

3 Way Plug : 0
Ball : 1
Plug: 0
Butterfly 2in. to 8in. : 0
Butterfly 10in. to 14in. : 0
Butterfly Greater Than 14in. : 0
Angle Valve Flow Up: 0
Angle Valve Flow Down : 0
Pipe Entrance: 1
Pipe Exit : 0
No. of Reducers: 0
Reducer Outlet Size (in) : 0
No. of Increasers: 0
Increaser Outlet Size (in) : 0

APPENDIX D

Soil Vapor Extraction System Equipment Specifications

Data

Rietschle Thomas
A Thomas Industries Company

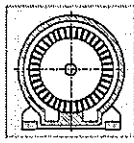

Side channel vacuum pumps	Bombas de vacío de canal lateral	Turbine latérale vide	Bombas de vácuo de canal lateral

SAP

BORA

SAP 220
SAP 300
SAP 380
SAP 450

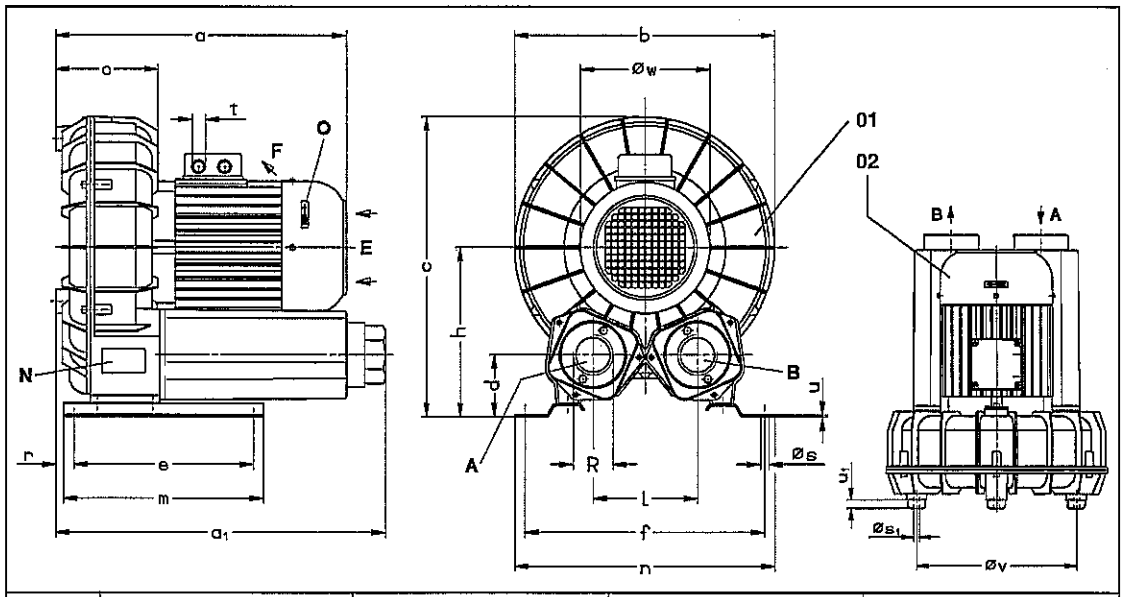

01	Standard version	Versión estándar	Exécution standard	Versão padronizada
02	Vertical version	Versión vertical	Exécution vertical	Versão vertical
A	Vacuum connection	Conexión vacío	Raccord du vide	Conexão do vácuo
B	Exhaust	Escape	Refoulement	Exaustão
E	Cooling air entry	Entrada aire refrigerante	Entrée air refroidissement	Entrada do ar refrigerante
F	Cooling air exit	Salida aire refrigerante	Sortie air refroidissement	Saída do ar refrigerante
N	Data plate	Placa fecha	Etiquette caractéristique	Placa da data
O	Rotation arrow	Dirección de rotación	Flèche sens rotation	Direção da rotação

SAP		220			300			380			450		
[inches]	a	15.12	16.50	16.93	16.81	17.24	17.36	17.76	17.87	#	17.24	23.94	23.94
	a_1	17.64			19.60			20.59			23.54		
	b	14.57			15.20			17.01			17.72		
	c	16.30			17.44			20.51			20.67		
	d	3.19			3.62			3.82			4.61		
	e / f	10.63 / 10.83			10.63 / 14.02			10.63 / 14.17			18.50 / 16.14		
	h	9.02			9.84			10.63			11.81		
	m / n	11.81 / 12.01			11.81 / 15.20			11.81 / 15.35			13.69 / 17.32		
	l	5.51			6.10			6.10			7.13		
	o	5.91			6.18			7.09			7.09		
	r	1.65			1.18			1.85			1.73		
	øs / $øs_1$	0.43 / M6			0.43 / M8			0.43 / M8			0.43 / M10		
	t	M 20 x 1.5			M 20 x 1.5			M 20 x 1.5			M 20 x 1.5		M32x1,5
	u	0.12			0.12			0.12			0.16		
	u_1	0.79			0.59			0.59			1.18		
	øv	11.02			12.60			12.60			14.76		
	øw	6.97	6.97	7.68	6.97	7.68	8.62	7.68	8.62	#	8.62	9.69	9.69
	R	2" NPT			2" NPT			2" NPT			3" NPT		

ZRK		50 (05)			50 (05)			50 (05)			80 (05)		
ZUV/ZBS	50 Hz	ZBS 65	ZUV 32		ZBS 65	ZBS 65	ZBS 40	ZBS 65	ZBS 65	-	ZBS 65	ZBS 80	ZBS 80
	60 Hz	ZBS 65	ZUV 32		ZBS 80	ZBS 80	ZBS 65	ZBS 65	ZBS 65	-	ZBS 65	ZBS 80	ZBS 80
ZVF 50 Hz / 60 HZ		50 (71)			65 (70)			65 (70) / 100 (74)			100 (70)		
ZGD		50 (06)			50 (06)			50 (06)			80 (06)		
ZFP		216 (01)			216 (51)			216 (52)			216 (52)		
ZMS		#			#			#			#		
ZWS		83 (11)			83 (12)			83 (12)			131 (10)		

	Accessories	Accesorios	Accessoires	Acessórios
ZRK	Non return valve	Válvula retención	Clapet anti-retour	Válvula sem retorno
ZUV/ZBS	Vacuum limitation valve	Válvula limitación vacío	Limiteur de dépression	Válvula de limitação do vácuo
ZVF	Vacuum tight suction filter	Filtro succión hermético	Filtre d'aspiration étanche	Filtro de sucção à prova de vácuo
ZGD	Additional silencer	Silenciador adicional	Silencieux complémentaire	Silenciador adicional
ZFP	Dust separator	Separador de polvo	Filtre séparateur étanche	Separador de poeira
ZMS	Motor starter	Arranque motor	Disjoncteur moteur	Arranque do motor
ZWS	Change over valve	Válvula conmutadora	Inverseur de débit	Permuta de válvula

Models **SAP / 5.5 kw** and larger have an additional cooling fan situated between the motor and blower housing.
Los modelos **SAP / 5.5 kw** y superiores cuentan con un ventilador de refrigeración adicional situado entre el motor y la caja de la soplante.
A partir de la **SAP / 5.5 kw**, un ventilateur complémentaire est inséré entre le moteur et le corps de la turbine.
Os modelos a partir do **SAP / 5.5 kw** têm uma ventoinha de refrigeração adicional colocada entre o motor e o corpo do ventilador.

DA 545/2

4.1.2002

Rietschle Thomas Hanover Inc.
7222 Parkway Drive
HANOVER, MD 21076
USA
☎ 410-712-4100
Fax 410-712-4148
E-Mail:
sales@vacuumpumps.com
http://
www.vacuumpumps.com

SAP		220			300			380			450		
cfm	50 Hz	135			177			212			271		
	60 Hz	162			212			253			318		
in. water (V)	50 Hz	72.3	100	112	70.3	104	124	72.3	108	-	80.3	128	-
	60 Hz	60.2	92.3	108	54.2	84.3	124	56.2	100	-	68.3	120	141
3~	50 Hz	200-255/346-440V ± 5%											
	60 Hz	200-277/346-480V ± 5%											
kw	50 Hz	1.5	2.2	3.0	2.2	3.0	4.0	3.0	4.0	-	4.0	5.5	-
	60 Hz	1.8	2.6	3.6	2.6	3.6	4.8	3.6	4.8	-	4.8	6.5	9.0
A	50 Hz	8.7/5.0	12.1/7.0	14.9/8.6	12.1/7.0	15.9/9.2	19.0/11	15.9/9.2	19.0/11	-	19.0/11	23.5/13.5	-
	60 Hz	7.7/4.5	11.3/6.5	13.9/8.0	11.3/6.5	15.2/8.8	19.0/11	15.2/8.8	19.0/11	-	19.0/11	28.0/16.0	33.0/19.0
rpm	50 Hz	2850											
	60 Hz	3450											
dB(A)	50 Hz	68	68	68	68	70	72	71	71	-	71	71	-
	60 Hz	72	72.5	72.5	70	73	77	74	75	-	75	75	75
lbs		79	80	93	93	97	117	116	128	-	146	196	209

cfm	Capacity	Capacidad	Débit	Capacidade
in. water	Pressure difference	Diferencia de presión	Différence surpression	Pressão diferencial
V	Vacuum operation	Operación vacío	Fonction dépression	Operação do vácuo
3~	Motor version	Versión motor	Exécution moteur	Versão do motor
kw	Motor rating	Datos motor	Puissance moteur	Potência do motor
A	Full load amperage	Amperaje de plena carga	Intensité absorbée	Amperagem da carga total
rpm	Speed	Velocidad	Vitesse rotation	Velocidade
dB(A)	Average noise level (Discharge connected to a pipeline)	Nivel de ruido medio (Descarga conectada a tubería)	Niveau sonore moyen (Refoulement au travers d'un tuyau	Nível médio de ruído (Descarga ligada a uma tubulação)
lbs	Weight	Peso	Poids	Peso

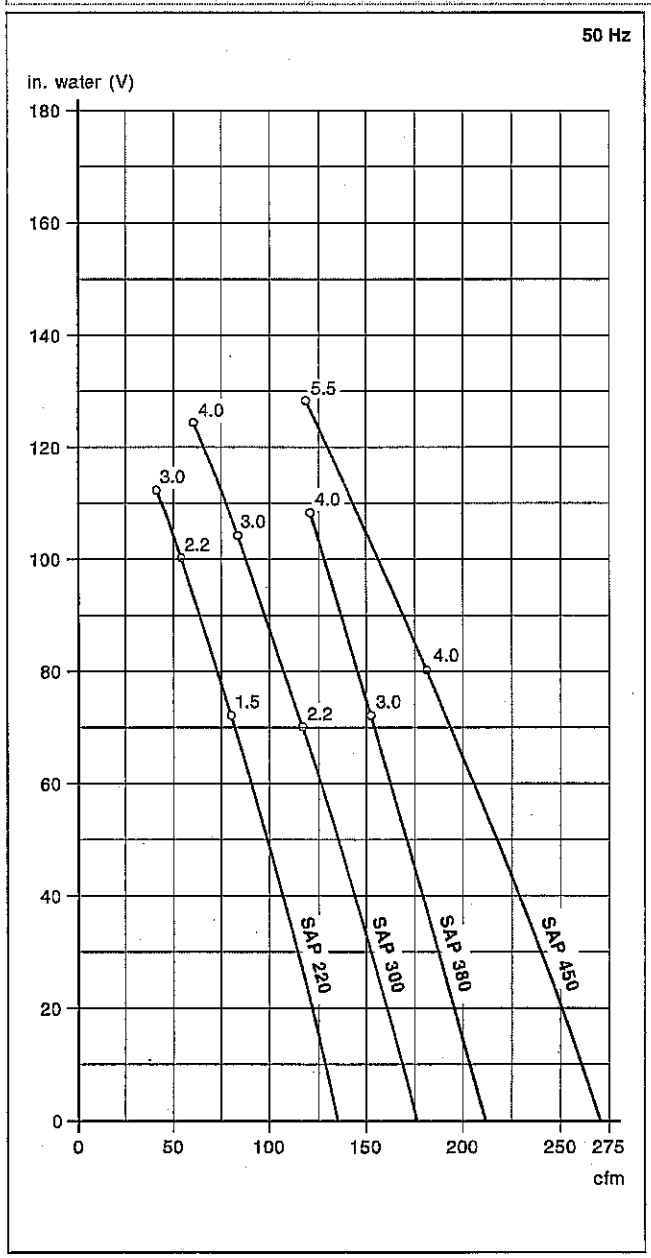

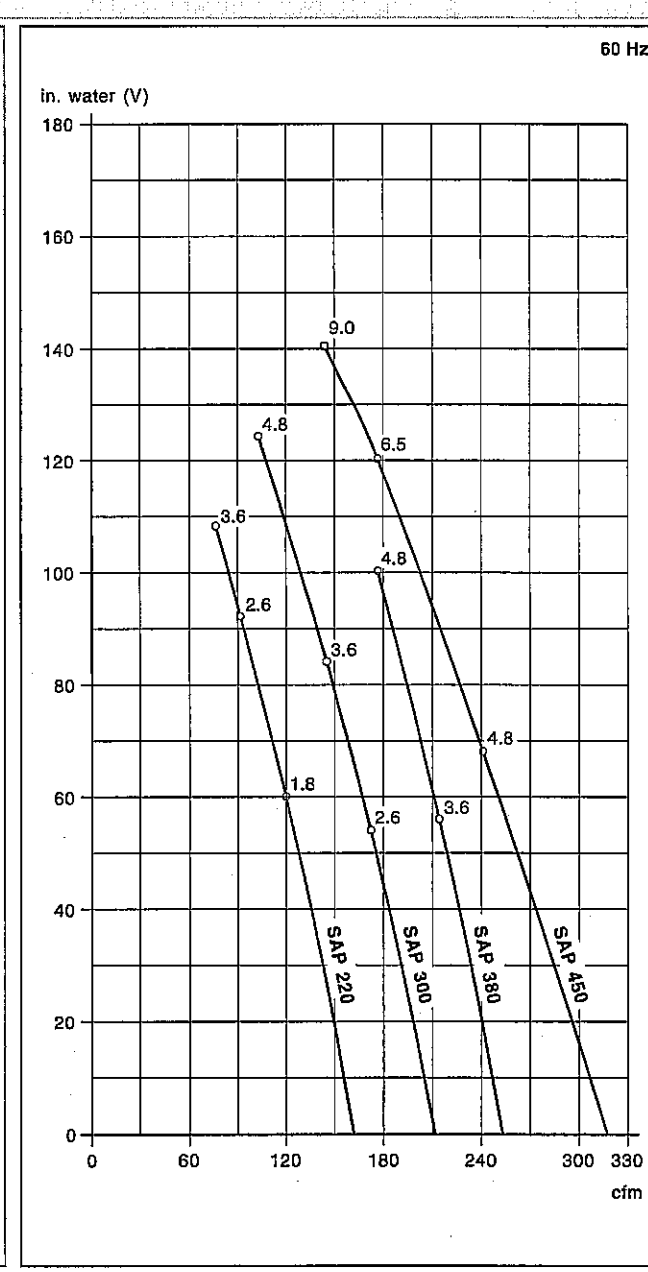

The curves have a tolerance of ±10% and are based on inlet conditions at 68°F and a barometric pressure of 29.92" HgA./ Las curvas tienen una tolerancia del ± 10 % y trabajan con condiciones de entrada de 68°F y una presión de retroceso de 1 bar (abs.)./ Les courbes (tolérance ±10%) sont établies pour de l'air aspiré à 68°F et une pression au refoulement de 29.92" HgA./ As curvas têm uma tolerância de ±10% e estão relacionadas com as condições de admissão a 68°F e uma contra-pressão de 29.92" HgA.
Technical information is subject to change without notice!/ La información técnica está sujeta a cambios sin previo aviso!/ Sous réserve de modification technique./ A informação técnica está sujeita a mudança sem aviso prévio! # on request # on pedido # sur demande # a pedido

APPENDIX E

Air Treatment Equipment Specifications

Gas Phase Carbon Absorber Vessel — GPC 20R

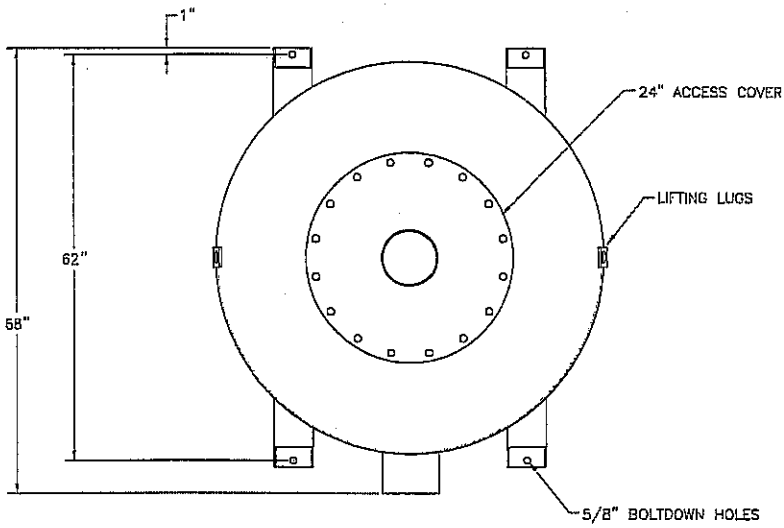

PLAN VIEW

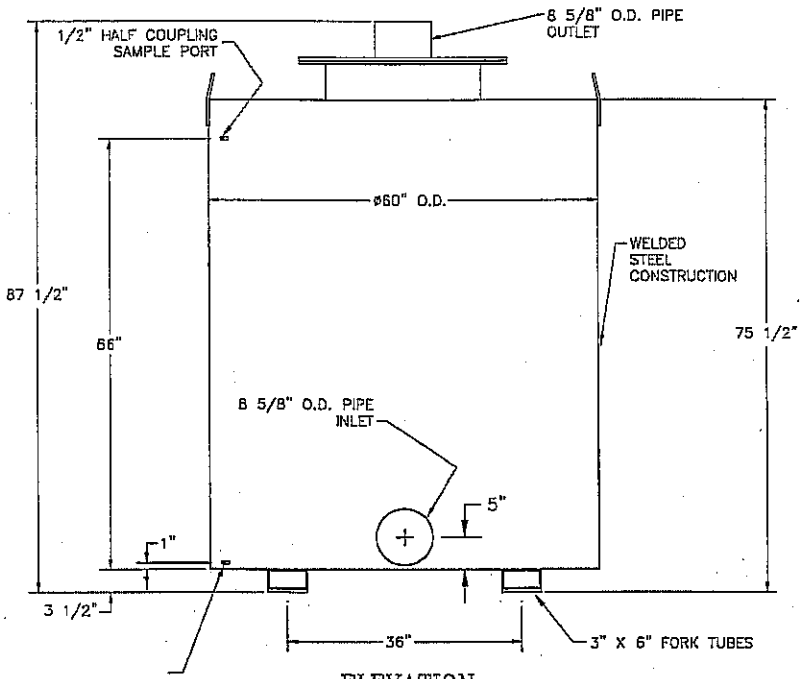

ELEVATION

Vessel Specifications

Flow Range (cfm):	200 - 1800
Carbon Capacity (lb):	2000
Empty Weight (lb):	1200
Operating Weight (lb):	3200
Maximum Recommended Temperature (°F):	120
Minimum Temperature (°F):	34

Options

Hose Kits

Discharge Stack

Note: Actual dimensions and orientations may vary slightly than shown above.

MINNESOTA: (corp hdqrtrs)
Carbonair
2731 Nevada Ave. N.
New Hope, MN 55427
PH:800.526.4999
763.544.2154
FAX:763.544.2151
Homepage: www.carbonair.com

FLORIDA:
Carbonair
4710 Dignan Street
Jacksonville, FL 32254
PH:800.241.7833
904.387.4465
FAX:904.387.5058

VIRGINIA:
Carbonair
4328 West Main St.
Salem, VA 24153
PH:800.204.0324
540.380.5913
FAX:540.380.5920

TEXAS:
Carbonair
4889 Hunter Rd. Bldg 1-C
San Marcos, TX 78666
PH:800.893.5937
512.392.0085
FAX:512.392.0066

PRESSURE DROP THROUGH CARBONAIR GAS-PHASE UNITS

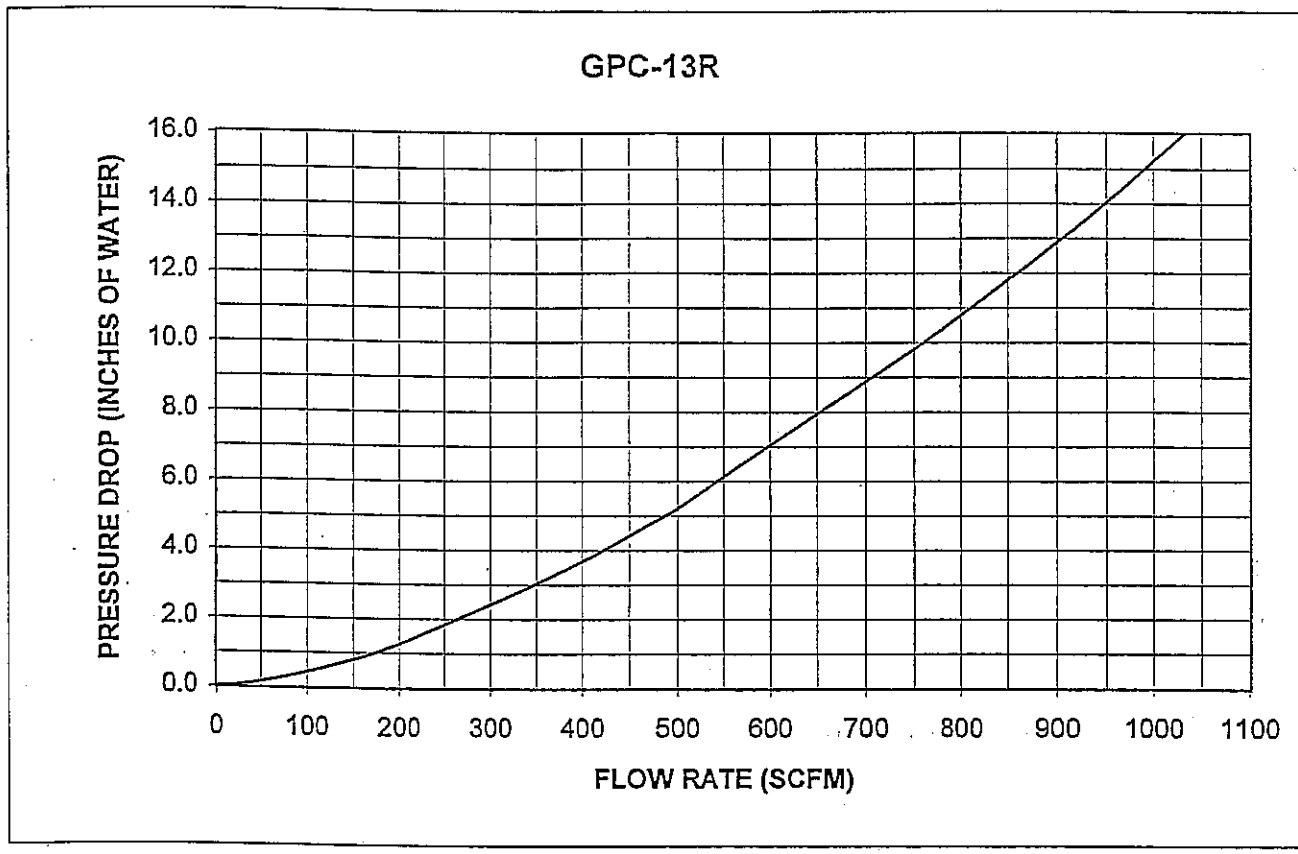

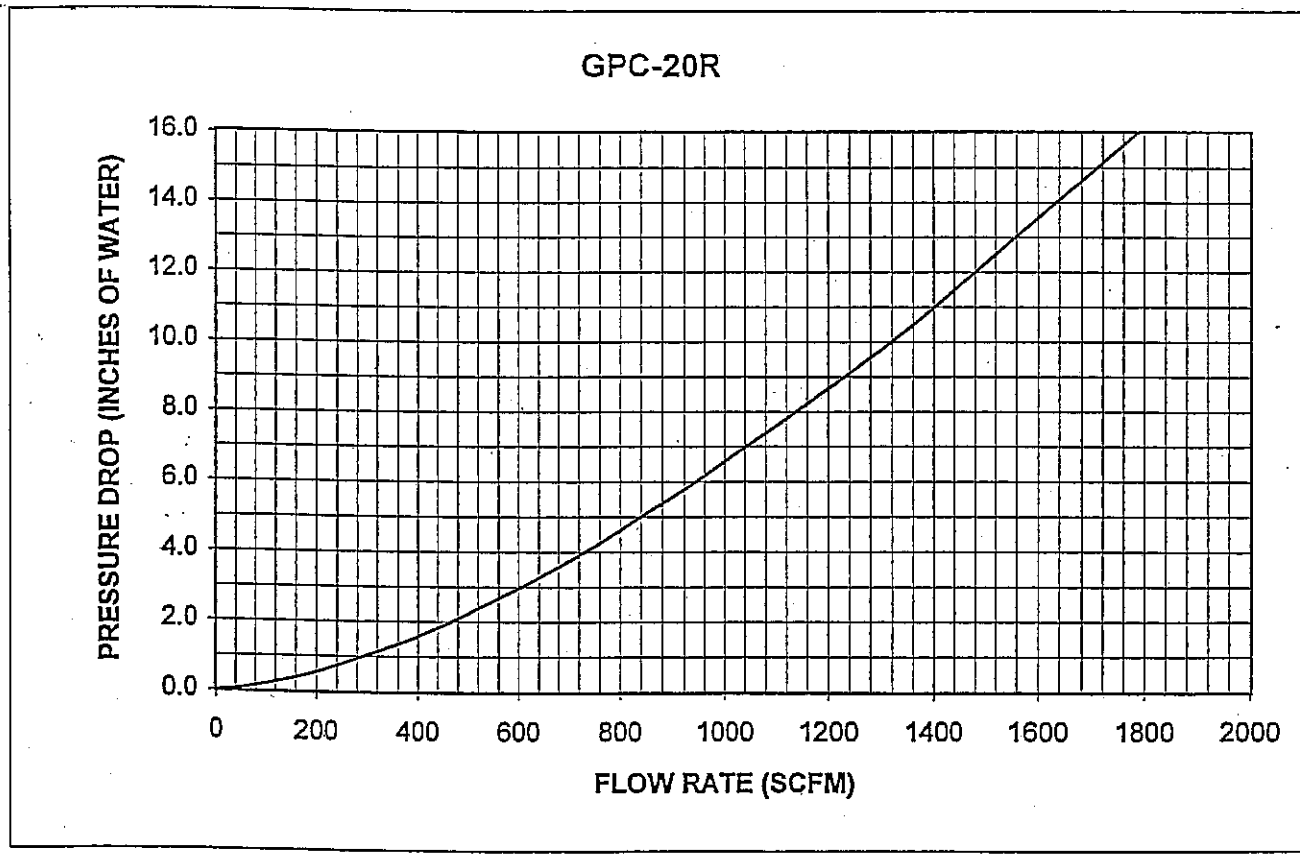

©CARBONAIR 1998

APPENDIX F

Soil Vapor (Flammable, Maximum, and Average) VOC Loading Calculations

Air Sparge / Soil Vapor Extraction Design Calculations

Maximum Vapor Phase Concentration:

$C_{V1MAX} = (X \cdot M_w \cdot P_v) / R \cdot T = H \cdot C_w$

Where:

X = mole fraction of compound in immiscible phase (moles / total moles)

M_w = molecular weight of compound (mg / mole)

P_v = vapor pressure of compound (atm)

R = gas constant = 0.0821 L atm / mole • k

T = absolute temperature (k)

H = Henry's Law Constant = mg/L in air / mg/L in water

C_w = dissolved concentration of compound (mg/L)

*see Table F.2 for calculations

Maximum Removal Rate by Volatilization:

$R_{vc} = Q_{inj} \cdot C_{v1max}$ (lbs / hr)

Where:

Q_{inj} = approximate average total air injection flow rate (all wells) (ft^3/min)

C_{v1max} = maximum vapor phase concentration (mg/L)

R_{vc} = Aggregate concentrations of R_{VLmax} for VOC compounds

R_{VLmax} = (100 cfm) (5.64 mg/$L_{1,1,1\ DCA}$)[6.243 x 10^{-5} (lbs/ft^3)/(mg/L)

= 2.11 lbs/hr

*see Table F.2 for calculations

Average Vapor Phase Concentration:

$C_{v1avg} = (X \cdot M_w \cdot P_v) / R \cdot T = H \cdot C_{w(avg)}$

*see Table F.3 for calculations

Average Removal Rate by Volatilization

R_{v1cavg} = (100 cfm) • (1.233 mg/$L_{1,1\ DCA}$) • [6.243 X 10^{-5} (lbs/ft^3)/(mg/L)]

= 0.46 lbs/hr

Source of Equations: A. Leeson, et al. 2002. *Air Sparging Design Paradigm*. Battelle. Columbus, Ohio. 12 August 2002.

TABLE F.1

Flammable Vapor LEL Calculations
Southeast Rockford Groundwater Contamination Superfund Site
Area 9/10
Rockford, Illinois

Compound	Maximum Concentration (mg/L)	Henry's Constant (mg/l vapor/mg/l H_2O)	Maximum Volatilization Concentration (mg/l)	Maximum Vapor Concentration (ppmv)	LEL (%)	LEL (ppmv)
1,1 - DCA	30	0.188	5.640	1392.59	5.4	54000.0
1,1 - DCE	1.7	0.904	1.537	379.46	6.5	65000
1,2 - DCE Total	28	0.318	8.904	2242.82	5.6	56000.0
PCE	0.29	0.579	0.168	24.77	NA	NA
Xylenes	2.1	0.141	0.296	68.23	0.9	9000.0
1,1,1 - TCA	34	0.57	19.380	3273.81	7.5	75000.0
1,1,2 - TCA	0.011	0.0202	0.00022	0.04	6.0	6000.0
TCE	0.2	0.335	0.067	12.48	8.0	8000.0
VC	3.5	0.981	3.434	1341.21	3.6	3600.0

Total Maximum Vapor Concentration (ppmv)	8735.40

Maximum concentrations from 11/17/04 sampling event

TABLE F.2

SECOR

Maximum Vapor Concentration
Southeast Rockford Groundwater Contamination Superfund Site
Area 9/10
Rockford, Illinois

Compound	Maximum Concentration (mg/L)	Monitoring Well	Henry's Constant (mg/l vapor/mg/l H_2O)	Maximum Volatilization Concentration (mg/l)	Flowrate (SCFM)	Maximum Removal Rate (lbs/hr)	VOC [1] (lbs/hr)	HAP [2] (lbs/hr)
1,1 - DCA	30	SMW-20	0.188	5.640	100	2.11	2.11	
1,1 - DCE	1.7	SMW-21	0.904	1.537	100	0.58	0.58	
1,2 - DCE Total	28	SMW-20	0.318	8.904	100	3.34	3.34	
PCE	0.29	SMW-22	0.579	0.168	100	0.06	0.06	0.06
Xylene	2.1	SMW-21	0.141	0.296	100	0.11	0.11	0.11
1,1,1 - TCA	34	SMW-21	0.57	19.380	100	7.27		
1,1,2 - TCA	0.011	SMW-21	0.0202	0.00022	100	0.00008		
TCE	0.2	SMW-21	0.335	0.067	100	0.03	0.03	0.03
VC	3.5	SMW-20	0.981	3.434	100	1.29	1.29	1.29

Summary	lbs/hr	tons/yr
TOTAL	14.78	64.74
VOC TOTAL	7.52	32.94
HAP TOTAL	1.49	6.53

[1] Shaded cells exempt VOCs per 40 CFR 51.100

[2] Shaded cells not HAPs

Maximum concentrations from 11/17/04 sampling event

TABLE F.3

Average Vapor Concentration
Southeast Rockford Groundwater Contamination Superfund Site
Area 9/10
Rockford, Illinois

Compound	Average Concentration (mg/L)	Henry's Constant (mg/l vapor/mg/l H_2O)	Average Volatilization Concentration (mg/l)	Flowrate (SCFM)	Maximum Removal Rate (lbs/hr)	VOC [1] (lbs/hr)	HAP [2] (lbs/hr)
1,1 - DCA	6.56	0.188	1.233	100	0.46	0.46	
1,1 - DCE	0.49	0.904	0.443	100	0.17	0.17	
1,2 - DCE Total	6.02	0.318	1.914	100	0.72	0.72	
PCE	0.06	0.579	0.035	100	0.01	0.01	0.01
1,1,1 - TCA	8.21	0.57	4.680	100	1.75		
1,1,2 - TCA	0.002	0.0202	0.00004	100	0.00		
Xylenes	0.57	0.141	0.08037	100	0.03	0.03	0.03
TCE	0.07	0.335	0.023	100	0.01	0.01	0.01
VC	0.7	0.981	0.687	100	0.26	0.26	0.26

Summary	lbs/hr	tons/yr
TOTAL	3.41	14.93
VOC TOTAL	1.66	7.27
HAP TOTAL	0.31	1.36

[1] Shaded Cells exempt VOCs per 40 CFR 51.100(s)

[2] Shaded Cells not HAPs

-Average concentrations calculated from 11/18/04 analytical data from monitoring wells MW-201, SMW-6, SMW-20, SMW-21, and SMW-22

APPENDIX G

Final Outside Container Storage Area
Source Mass Reduction Work Plan

Final Outside Container Storage Area Source Material Mass Reduction Work Plan

Remedial Design

Area 9/10

Southeast Rockford Groundwater Contamination

Superfund Site

Rockford, Illinois

CERCLIS ID No. ILD981000417

Prepared for:

Hamilton Sundstrand Corporation

4747 Harrison Avenue

Rockford, Illinois 61125

Submitted by:

SECOR

SECOR International Incorporated

446 Eisenhower Lane North

Lombard, Illinois 60148

TABLE OF CONTENTS

SECTION	PAGE NO.
SECTION 1.0 INTRODUCTION	**1-1**
SOURCE MATERIAL MASS REDUCTION OBJECTIVES	1-2
OSA SOURCE MATERIAL EXCAVATION RATIONALE	1-6
DESCRIPTION AND USE OF THE OSA	1-6
HISTORICAL ACTIVITIES AT THE OSA	1-7
SITE GEOLOGY	1-7
CONSTITUENTS OF CONCERN	1-7
SECTION 2.0 OSA INVESTIGATION AND DATA EVALUATION	**2-1**
2003 PRE-DESIGN INVESTIGATION AND PILOT STUDIES	2-1
SOIL ANALYTICAL RESULTS EXCEEDING ROS	2-2
AVERAGED SOIL RESULTS AND MASS ESTIMATION	2-2
OSA EXCAVATION SUBAREAS AND TARGET DEPTHS	2-4
MASS OF POST EXCAVATION SOURCE MATERIAL REMOVED BY EXCAVATION	2-4
NATURAL ATTENUATION ENHANCEMENT OPPORTUNITY IDENTIFIED	2-8
SECTION 3.0 METHODS AND PROCEDURES	**3-1**
HEALTH AND SAFETY PLAN, SITE SECURITY, AND WORK ZONES	3-1
AIR MONITORING	3-4
CORRECTIVE ACTION MEASURES AND CONTINGENCY PLANNING	3-4
NATURAL ATTENUATION ENHANCEMENT	3-5
WELL ABANDONMENT	3-6
WASTE CHARACTERIZATION	3-6
EXTENT OF EXCAVATION ACTIVITIES AND CONSTRAINTS	3-7
EXCAVATION EQUIPMENT, LOADING, AND TRANSPORT	3-8
HAZARDOUS WASTE DISPOSAL	3-8
DECONTAMINATION	3-8
EXCAVATION SAMPLING	3-9

SECTION	PAGE NO.
EXCAVATION BACKFILLING	3-12
CLAY CAP PLACEMENT	3-12
SECTION 4.0 DOCUMENTATION	**4-1**
NATURAL ATTENUATION ENHANCEMENT	4-1
WELL ABANDONMENT	4-1
EXCAVATION MASS REDUCTION ACTIVITY REPORTING	4-1
EXCAVATION SAMPLING ANALYSIS AND EVALUATION	4-2
EXCAVATION BACKFILL AND CLAY CAP CONSTRUCTION	4-2
PHOTOGRAPHIC DOCUMENTATION	4-2

TABLES		PAGE NO.
Table 2.1	OSA Soil Analytical Results Averaged By Boring	2-3
Table 2.2	Estimate of Post Excavation COC Concentrations Remaining That Exceed ROs	2-6
Table 2.3	Estimate of Tetrachloroethane Mass In Soil	2-7

FIGURES		PAGE NO.
Figure 1.1	Site Location Map	1-3
Figure 1.2	Site Map Hamilton Sundstrand	1-4
Figure 1.3	OSA Features	1-5
Figure 2.1	Target Excavation Depths By Subarea	2-5
Figure 3.1	Excavation Work Zones	3-3
Figure 3.2	Representative Excavation Sample Locations	3-11

APPENDICES

APPENDIX A	USEPA Approval Letter and Correspondence
APPENDIX B	OSA Soil Investigation Analytical Results -- October 2003 Summary Tables
APPENDIX C	HRC-X Product Information & Calculation Spreadsheet

SECTION 1.0 INTRODUCTION

This Outside Container Storage Area (OSA) Source Material Mass Reduction Work Plan (SMMRWP) presents the rationale, procedures, and methods to address in part the Southeast Rockford Source Control Operable Unit identified as Area 9/10W in the Area 9/10 portion of the Southeast Rockford Groundwater Contamination Superfund Site (SER site) located in the City of Rockford, Illinois (Figure 1.1). The term "Site" refers to Area 9/10, an industrial area in Rockford, Winnebago County, Illinois, that is bounded by Eleventh Street on the east, Twenty-third Avenue on the north, Harrison Avenue on the south, and Sixth Street on the west. The OSA was operated as a RCRA hazardous waste storage facility by the Hamilton Sundstrand Corporation (HS) Plant #1 facility which is located within Area 9/10 at 2421 Eleventh Street. Figure 1.2 depicts a site map of the HS facility. This SMMRWP provides a detailed description of activities to be implemented in the OSA area. The OSA site features are shown on Figure 1.3.

HS is working with the United States Environmental Protection Agency (USEPA) and the Illinois Environmental Protection Agency (IEPA) in accordance with the Administrative Order on Consent (AOC) for Remedial Design for Area 9/10 signed on January 13, 2003 and the Record of Decision (ROD) relating to source control for the SER site which was signed on June 11, 2002. As part of the remedial design process, a Pre-Design Investigation (PDI) was completed in the vicinity of and on the HS property, including the OSA. A pilot test of the selected ROD technologies, soil vapor extraction and air sparging, was also conducted at the OSA.

The investigation and pilot study results indicated that the majority of source material with the future potential to impact groundwater within the OSA is located in the near surface soils.

This proposed effort has been identified as an opportunity to provide practical support for the overall action to be taken in Area 9/10 and the overall SER site to address source control with respect to the Operable Unit Three ROD with a specific focus on the OSA.

SOURCE MATERIAL MASS REDUCTION OBJECTIVES

The objective of this work plan is to address a substantive portion of the source material identified at the OSA. The implementation of the activities outlined in this plan will help meet the goals the ROD established for Area 9/10. This will be accomplished by the following:

- Contaminant mass removal by excavation and off-Site disposal of source material;
- Enhancement of natural attenuation ongoing at the Site; and
- Limiting water infiltration by construction of a clay cap over the OSA.

The SMMRWP work plan was initially dated and submitted to USEPA on April 27, 2005. Correspondence addressing Agency (USEPA and IEPA) comments was submitted on June 28, 2005. The USEPA approved the work plan with modifications in a letter dated August 15, 2005. This final work plan has been revised to incorporate the Agency comments and requested modifications. Copies of the USEPA work plan approval letter and the response to Agency comments are provided in Appendix A. This document has since been included in the Remedial Design. The plan has been revised to incorporate the response to IEPA comments on the remedial design. The IEPA letter was dated August 31, 2006 and the response letter was dated October 31, 2006.

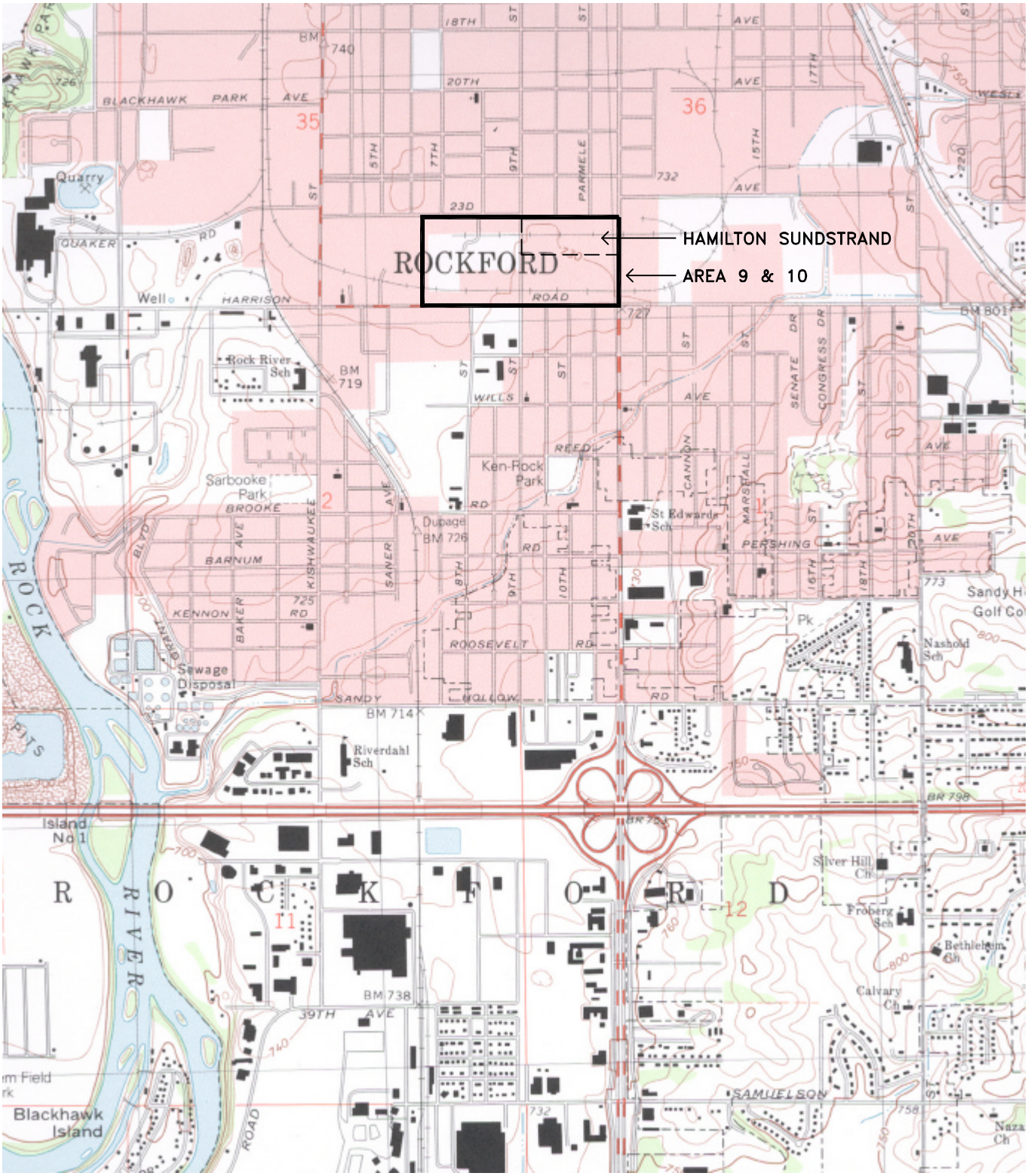

0 1000 2000 3000 4000 5000

SCALE IN FEET

N

REFERENCE: USGS 7.5 MINUTE QUADRANGLE: ROCKFORD SOUTH, IL

DESIGNED BY:	KTW
DRAWN BY:	MWB
APPROVED BY:	DMC
DATE:	3-21-05

SECOR

SITE LOCATION MAP

HAMILTON SUNDSTRAND
AREA 9/10
ROCKFORD, ILLINOIS

JOB NO. 13UN.02072.05.0001

FIGURE 1.1

S:\PROJECTS\013_lombard_projects\13UN.02072.00_ROCKFORD\SF_Rockford

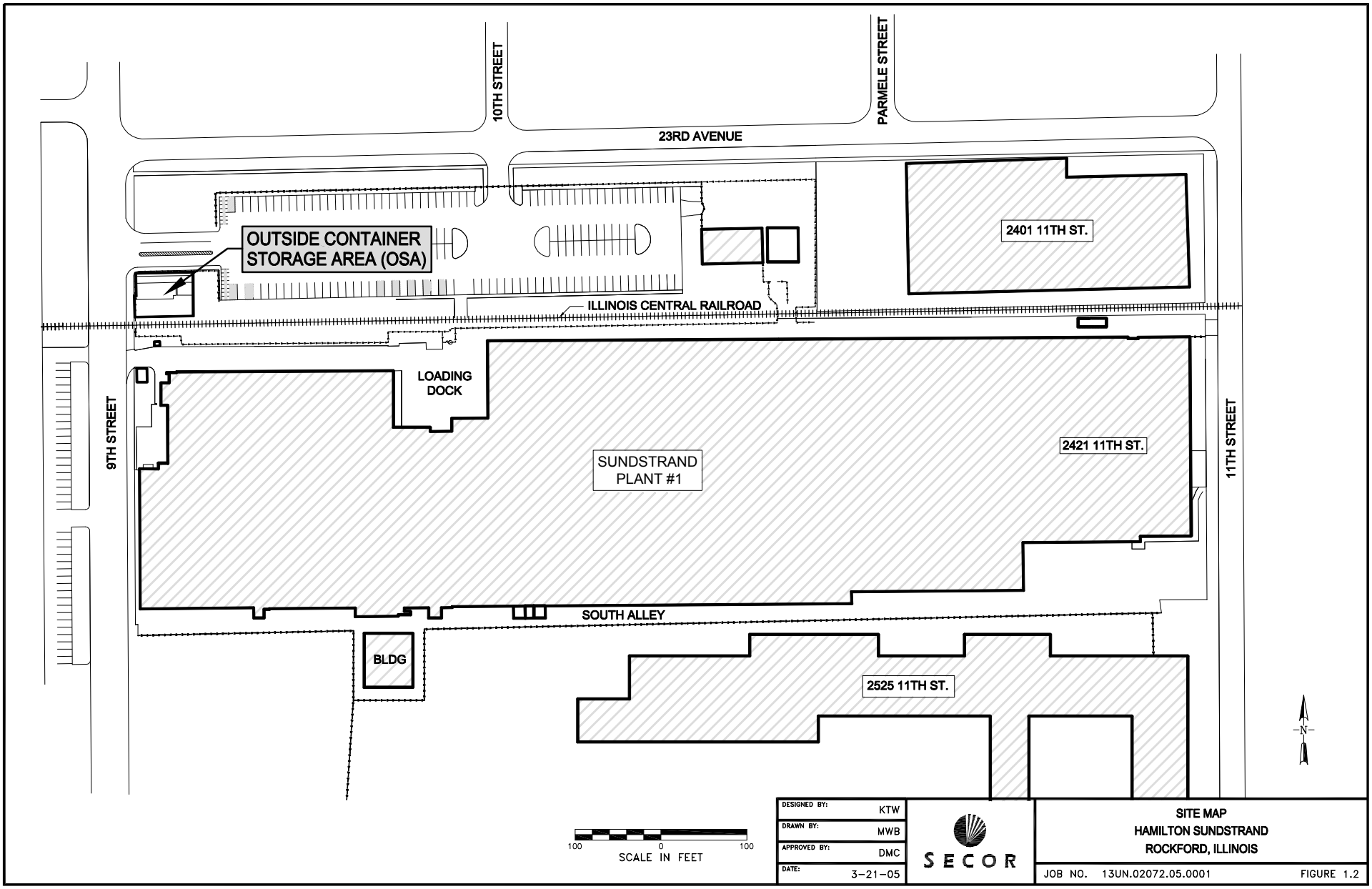
10TH STREET
PARMELE STREET
23RD AVENUE
OUTSIDE CONTAINER STORAGE AREA (OSA)
2401 11TH ST.
ILLINOIS CENTRAL RAILROAD
LOADING DOCK
9TH STREET
SUNDSTRAND PLANT #1
2421 11TH ST.
11TH STREET
SOUTH ALLEY
BLDG
2525 11TH ST.
N
100 0 100
SCALE IN FEET
DESIGNED BY: KTW
DRAWN BY: MWB
APPROVED BY: DMC
DATE: 3-21-05
SECOR
SITE MAP
HAMILTON SUNDSTRAND
ROCKFORD, ILLINOIS
JOB NO. 13UN.02072.05.0001
FIGURE 1.2

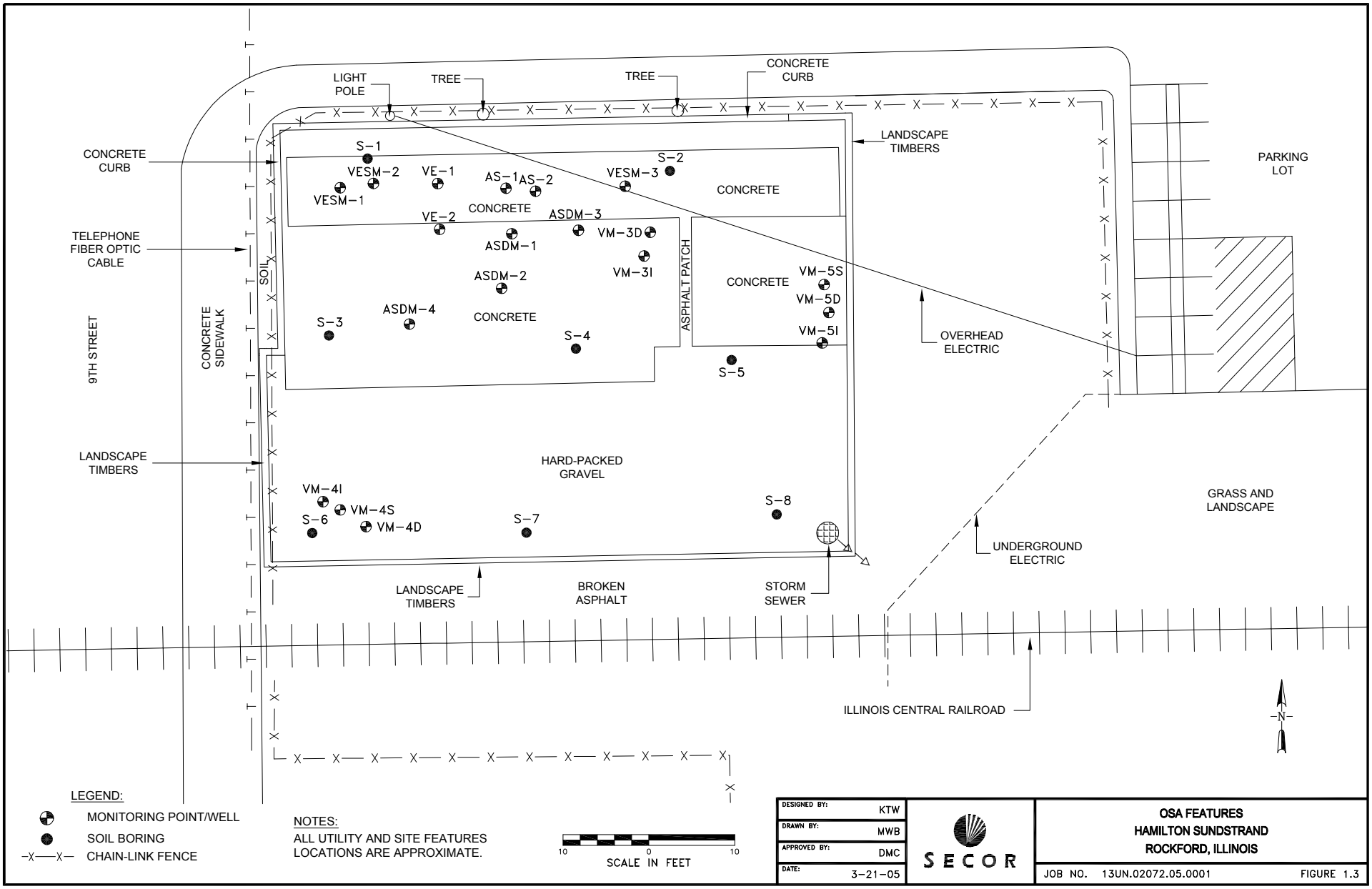
LIGHT POLE
TREE
TREE
CONCRETE CURB
CONCRETE CURB
LANDSCAPE TIMBERS
PARKING LOT
TELEPHONE FIBER OPTIC CABLE
9TH STREET
CONCRETE SIDEWALK
SOIL
S-1
VESM-2
VE-1
AS-1
AS-2
VESM-3
S-2
VESM-1
CONCRETE
VE-2
CONCRETE
ASDM-3
VM-3D
ASDM-1
VM-3I
ASDM-2
ASPHALT PATCH
CONCRETE
VM-5S
VM-5D
VM-5I
ASDM-4
CONCRETE
S-3
S-4
S-5
OVERHEAD ELECTRIC
LANDSCAPE TIMBERS
HARD-PACKED GRAVEL
VM-4I
VM-4S
S-6
VM-4D
S-7
S-8
GRASS AND LANDSCAPE
UNDERGROUND ELECTRIC
LANDSCAPE TIMBERS
BROKEN ASPHALT
STORM SEWER
ILLINOIS CENTRAL RAILROAD
N
LEGEND:
MONITORING POINT/WELL
SOIL BORING
CHAIN-LINK FENCE
NOTES:
ALL UTILITY AND SITE FEATURES LOCATIONS ARE APPROXIMATE.
10 0 10
SCALE IN FEET
DESIGNED BY: KTW
DRAWN BY: MWB
APPROVED BY: DMC
DATE: 3-21-05
SECOR
OSA FEATURES
HAMILTON SUNDSTRAND
ROCKFORD, ILLINOIS
JOB NO. 13UN.02072.05.0001
FIGURE 1.3

OSA SOURCE MATERIAL EXCAVATION RATIONALE

There are several contributing factors in the decision to excavate the impacted soils in this area and dispose of them offsite. Excavation offers immediate, quantifiable, and unequivocal results. Other factors include:

- Tetrachloroethene present at concentrations above the soil saturation limit (Csat) in shallow soils would be difficult and impractical to remediate using soil vapor extraction (SVE);
- Silty clay from the ground surface to a depth of approximately six feet will severely restrict airflow in the most impacted shallow soil zone;
- SVE for near surface soil remediation typically is susceptible to short circuiting of airflow from above ground and elicits a small radius of influence (ROI); and,
- Metals above ROs were detected in samples collected in the OSA that would not be addressed by other methods evaluated and identified in the ROD such as SVE;

The SVE Pilot Test performed in November 2003, and reported in the Pilot Test Summary Report dated October 2004, confirmed these technical challenges and limitations at the OSA with respect to shallow (near surface) soil impacts.

DESCRIPTION AND USE OF THE OSA

The OSA consists of a concrete pad approximately 30 feet wide by 65 feet long and a gravel area immediately south of the pad. The entire area of the OSA is 50 feet wide by 65 feet long. The OSA was used historically for the storage of a variety of waste materials including wastes stored in drums and bins of metal chips which contained non-hazardous coolants and cutting oils. The OSA is located in the northwest portion of the HS facility adjacent to the public right of way (concrete sidewalk) east of 9th Street. The area is surrounded by a chain link security fence.

HISTORICAL ACTIVITIES AT THE OSA

Historically, the pad had been constructed with a collection trench and underground drain line that connected to an underground storage tank (Tank #24). The underground drain line was removed in 1990 and the tank was removed in 1992. Minor portions of the concrete pad were removed to facilitate these activities. The concrete pad was sloped northward so that any liquids would drain into the collection trench. The collection trench was reportedly three feet wide, 60 feet long and eight inches deep. The collection trench, and OSA in general, was filled with pea gravel after being taken out of service for aesthetic purposes. When the OSA was in operation, the concrete pad area was covered by a metal corrugated roof supported by steel trusses and columns. This overhead structure has since been removed.

SITE GEOLOGY

The OSA concrete pad and gravel area surface cover are underlain by silty clay to a depth of approximately six feet. The clay overlies a poorly graded medium sand with occasional gravel layers and extends to a depth of greater than 140 feet. A thin, 1.5 to 4.0 feet thick silt layer, beginning at a depth of about 19 feet bgs, has been identified in this area. This silt layer is laterally discontinuous and is not present at boring locations to the south and east of the OSA. The water table is approximately 32 feet below ground surface (bgs).

CONSTITUENTS OF CONCERN

Based on the remedial investigation results and the preliminary remediation goals stated in the ROD, the constituents of concern (COCs) for Area 9/10 consist of volatile organic compounds (VOCs) and petroleum hydrocarbons associated with jet fuel. Previous sampling at the OSA also identified metals above the 35 IAC Part 742 Tiered Approach to Corrective Action Objectives (TACO) residential and commercial/industrial remediation objectives (ROs).

SECTION 2.0 OSA INVESTIGATION AND DATA EVALUATION

As part of the Area 9/10 remedial design activities, additional investigation was performed at the OSA to better understand the target constituent concentrations and their distribution within the soil matrix. Also, air sparge and SVE infrastructure was installed and pilot tested to identify the technical requirements and challenges to address the COCs.

2003 PRE-DESIGN INVESTIGATION AND PILOT STUDIES

In October 2003, a subsurface investigation was conducted at the OSA to provide a current condition assessment of constituents in soil. This investigation consisted of eight soil borings (S-1 through S-8) at the locations shown on Figure 1.3. Each of these borings extended to near the groundwater table at 30 to 32 feet bgs. Soil samples were collected in accordance with the approved Field Sampling Plan, dated March 31, 2003, and submitted to STL Laboratory in University Park, Illinois. Samples were analyzed for VOCs by Method 8260B; TCLP metals by SW-846 Methods 1311/6010B/7040A/7470A; and total petroleum hydrocarbons (TPH) consisting of diesel range organics (DRO) by Method 8015B MDRO. A summary of the analytical results is presented in Appendix B. These summary tables were also provided in the PDI Preliminary Results Summary Presentation Materials dated August 10, 2004 and the PDI Report dated April 28, 2006.

SVE and air sparge pilot testing was conducted in Fall 2003 using new and existing wells. In total, there are 17 extraction wells and monitoring points in the vadose zone and two air sparge wells screened within the saturated zone. The locations of these wells are shown on Figure 1.3. The test results and a compilation of all information collected were summarized in the Pilot Test Summary Report dated October 1, 2004 and submitted to USEPA. The pilot testing confirmed that significant air flow can be induced in this area under relatively low applied vacuums in the vadose zone; however, limited airflow was observed in the shallow soils where the majority of the contaminant mass was identified. These technologies also do not address metals contamination.

SOIL ANALYTICAL RESULTS EXCEEDING ROS

The soil analytical results were compared to the Preliminary Remediation Goals (PRGs) specified in the ROD dated June 11, 2002. The PRGs were derived from TACO Tier 1 residential and industrial/commercial ROs. However, they are not exposure pathway specific. To provide greater awareness of the potential for exposure the constituents exceeding ROs are identified based on pathway specific exposure routes as identified in TACO. The following constituents exceeded the soil component of the groundwater ingestion pathway: cadmium, lead, 1,1-dichloroethene (1,1 DCE), 1,2-dichloroethene (1,2 DCE), 1,1,1-trichloroethane (1,1,1 TCA), 1,1,2-trichloroethane (1,1,2 TCA), trichloroethene (TCE), and tetrachloroethene (PCE) in one or more OSA soil sample intervals. TCE and PCE also exceeded the inhalation pathway ROs and PCE exceeded the ingestion RO.

AVERAGED SOIL RESULTS AND MASS ESTIMATION

To identify potential source material soil concentrations were averaged using the 35 IAC Part 742.225(c) methodology. This resulted in continuous interval soil sample results which were averaged at each boring location. The averaged soil results indicated there are COCs above ROs. If constituents were below the method detection limit, one-half of the reporting limit was used as the value for averaging purposes. As a simplifying assumption, all of the samples from each boring were used to determine average concentrations, regardless of the number of times the COC was detected. A summary of the COCs is provided in Table 2.1. The COCs which exceeded the ROs after averaging of the samples were cadmium, lead, 1,1 DCE, 1,2 DCE, 1,1,1 TCA, 1,1,2 TCA, TCE, and PCE.

SECOR

TABLE 2.1
OSA SOIL ANALYTICAL RESULTS AVERAGED BY BORING
AREA 9/10
SOUTHEAST ROCKFORD GROUNDWATER CONTAMINATION SUPERFUND SITE
ROCKFORD, ILLINOIS

Boring Number	Constituents Exceeding ROs	PRGs/TACO Soil Remediation Objectives (ROs)	Constituent Maximum Concentration	Constituent Average Concentration Entire Boring
S-1	1,1-Dichloroethene	0.06	0.560	0.057
	1,2-Dichloroethene (total)	0.4	12.000	1.462
	Tetrachloroethene	0.06	360.000	34.206
	1,1,1-Trichloroethane	2	220.000	24.090
	Trichloroethene	0.06	18.000	1.877
	Lead	0.0075	0.009	0.004
S-2	1,1-Dichloroethene	0.06	1.300	0.098
	1,2-Dichloroethene (total)	0.4	7.200	0.542
	Tetrachloroethene	0.06	320.000	21.661
	1,1,1-Trichloroethane	2	240.000	16.100
	Trichloroethene	0.06	20.000	1.358
	Cadmium	0.005	0.012	0.003
S-3	1,2-Dichloroethene (total)	0.4	0.750	0.063
	Tetrachloroethene	0.06	20.000	1.339
	1,1,1-Trichloroethane	2	4.800	0.366
	Trichloroethene	0.06	0.450	0.036
	Cadmium	0.005	0.010	0.003
S-4	1,2-Dichloroethene (total)	0.4	0.450	0.112
	Tetrachloroethene	0.06	5.100	0.939
	Trichloroethene	0.06	0.310	0.066
	Cadmium	0.005	0.160	0.022
S-5	Tetrachloroethene	0.06	8.100	1.165
	Trichloroethene	0.06	0.190	0.031
	Cadmium	0.005	3.900	0.340
	Lead	0.0075	0.043	0.008
S-6	Tetrachloroethene	0.06	0.140	0.034
	Cadmium	0.005	0.008	0.003
	Lead	0.0075	0.110	0.010
S-7	Tetrachloroethene	0.06	49.000	3.299
	1,1,1-Trichloroethane	2	12.000	0.891
	Trichloroethene	0.06	0.670	0.048
	Lead	0.0075	0.028	0.005
S-8	Tetrachloroethene	0.06	2.800	0.240
	1,1,2-Trichloroethane	0.02	0.500	0.036
	Trichloroethene	0.06	0.110	0.011
	Cadmium	0.005	0.047	0.007

Notes:

VOC analysis by Method 8260B results are presented in mg/kg.

Metals results are from a TCLP extract and are presented in mg/l.

1) Preliminary Remediation Goals (PRGs) and Tier I Residential Soil Migration to Class I Groundwater; Tiered Approach to Corrective Action Objectives.

2) Average concentrations based on 1/2 the reporting limit for constituents that were not detected.

3) Constituent Concentrations in Soil Meet PRGs and TACO Tier I ROs.

4) Constituent Concentrations in Soil Exceed PRGs and TACO Tier I ROs.

5) 1,2 DCE (Total) ROs based on cis-1,2 DCE (more conservative than trans-1,2 DCE).

6) Due to averaging of results all concentrations are presented to the nearest 0.001

7) Soil Averaging based data from the interval of 0-32 feet except S-1 which is 0-34 feet.

The continuous depth interval sampling was used to identify the depth of potential source material at each boring. To facilitate this effort, the OSA area was divided into eight subareas, their boundaries being half way between the boring locations. The analytical data from each boring was considered representative of that subarea. This approach was used to develop a general estimate of the overall contaminant mass in place and determine what mass may potentially remain after the excavation and removal of impacted soil at each subarea in two feet lifts.

OSA EXCAVATION SUBAREAS AND TARGET DEPTHS

The removal of impacted soil to a minimum target depth of four feet is planned. The target depth for excavation of each subarea is shown on Figure 2.1. The actual depth of soil to be removed in each subarea will be based on health and safety considerations and preservation of the structural integrity of existing infrastructure including utilities onsite and adjacent to the OSA. A comparison of the post excavation average soil concentrations and ROs is provided in Table 2.2.

MASS OF POST EXCAVATION SOURCE MATERIAL REMOVED BY EXCAVATION

Upon completion of the excavation activities, assuming the target excavation depths are attained, the majority of soil containing elevated cadmium, lead, 1,1 DCE, 1,2 DCE, 1,1,1 TCA, 1,1,2 TCA, TCE, and PCE will have been removed, based on the current (S-1 through S-8) soil boring data. After the completion of this source removal effort it appears PCE will be the only VOC which will exceed the ROs. A comparison of the estimated mass of PCE currently in place and an estimate to remain after excavation is provided in Table 2.3. The estimate of PCE removal is believed to be greater than 95% of the initial mass.

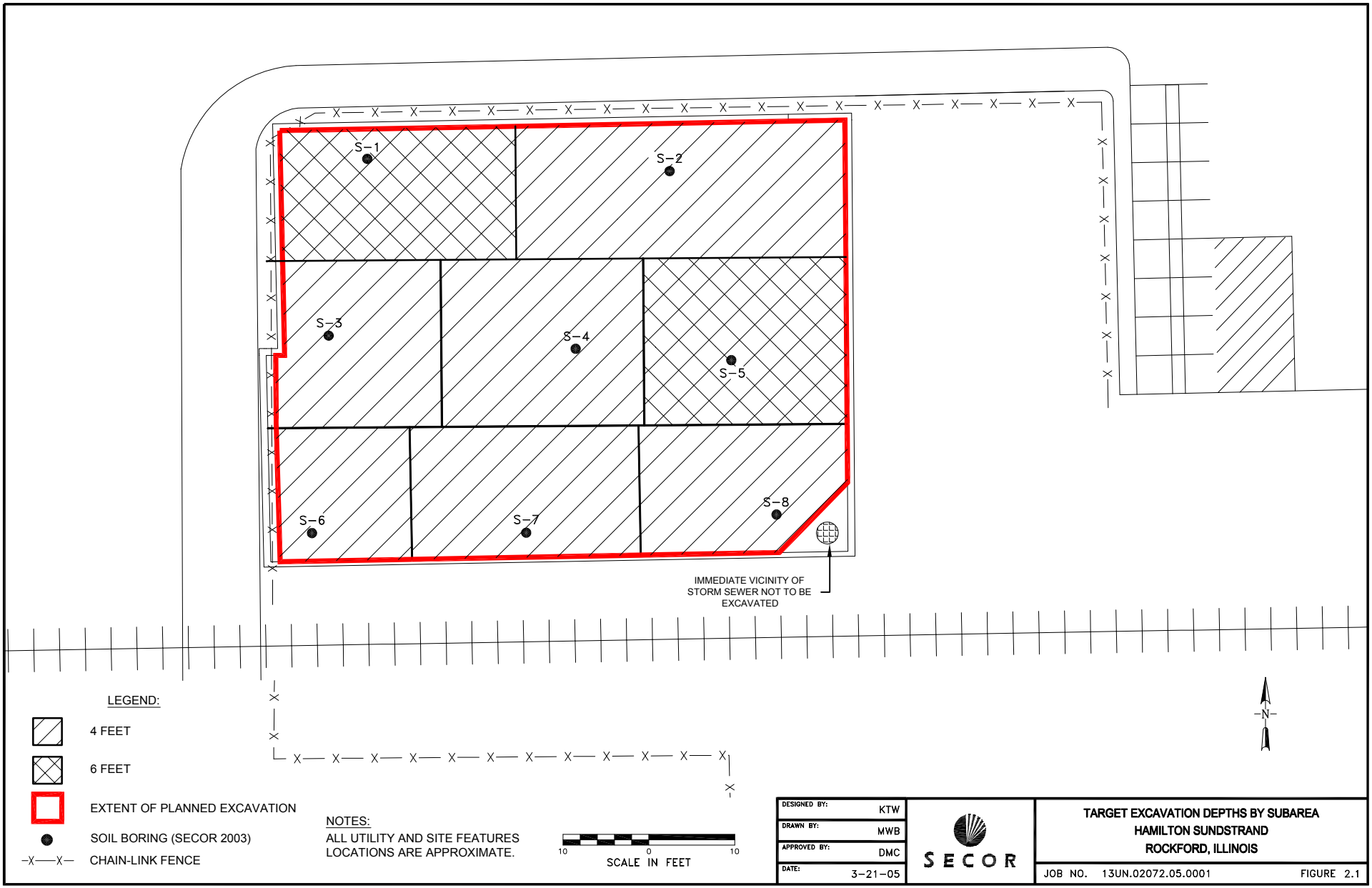
S-1
S-2
S-3
S-4
S-5
S-6
S-7
S-8
IMMEDIATE VICINITY OF STORM SEWER NOT TO BE EXCAVATED
LEGEND:
4 FEET
6 FEET
EXTENT OF PLANNED EXCAVATION
SOIL BORING (SECOR 2003)
CHAIN-LINK FENCE
NOTES:
ALL UTILITY AND SITE FEATURES LOCATIONS ARE APPROXIMATE.
10 0 10
SCALE IN FEET
N
DESIGNED BY: KTW
DRAWN BY: MWB
APPROVED BY: DMC
DATE: 3-21-05
SECOR
TARGET EXCAVATION DEPTHS BY SUBAREA
HAMILTON SUNDSTRAND
ROCKFORD, ILLINOIS
JOB NO. 13UN.02072.05.0001
FIGURE 2.1

SECOR

TABLE 2.2
OSA POST EXCAVATION AVERAGE SOIL CONCENTRATIONS
AREA 9/10
SOUTHEAST ROCKFORD GROUNDWATER CONTAMINATION SUPERFUND SITE
ROCKFORD, ILLINOIS

Boring Number	Constituents Exceeding ROs	PRG/TACO Soil Remediation Objectives (ROs)	Constituent Average Concentration w/ Excavation of 2 Feet	Constituent Average Concentration w/ Excavation of 4 Feet	Constituent Average Concentration w/ Excavation of 6 Feet
S-1	1,1-Dichloroethene	0.06	0.057	0.046	0.006
	1,2-Dichloroethene (total)	0.4	1.462	0.709	0.041
	Tetrachloroethene	0.06	34.206	10.935	0.238
	1,1,1-Trichloroethane	2	24.090	10.096	0.104
	Trichloroethene	0.06	1.877	0.725	0.012
	Lead	0.0075	0.004	0.004	0.004
S-2	1,1-Dichloroethene	0.06	0.098	0.012	0.009
	1,2-Dichloroethene (total)	0.4	0.542	0.067	0.051
	Tetrachloroethene	0.06	21.661	0.351	0.293
	1,1,1-Trichloroethane	2	16.100	0.107	0.087
	Trichloroethene	0.06	1.358	0.026	0.019
	Cadmium	0.005	0.003	0.003	0.003
S-3	1,2-Dichloroethene (total)	0.4	0.064	0.016	0.014
	Tetrachloroethene	0.06	1.426	0.099	0.107
	1,1,1-Trichloroethane	2	0.388	0.073	0.066
	Trichloroethene	0.06	0.036	0.006	0.006
	Cadmium	0.005	0.003	0.003	0.003
S-4	1,2-Dichloroethene (total)	0.4	0.098	0.069	0.069
	Tetrachloroethene	0.06	0.619	0.304	0.304
	Trichloroethene	0.06	0.049	0.029	0.021
	Cadmium	0.005	0.024	0.025	0.027
S-5	Tetrachloroethene	0.06	1.165	1.127	0.591
	Trichloroethene	0.06	0.031	0.030	0.017
	Cadmium	0.005	0.340	0.086	0.092
	Lead	0.0075	0.008	0.009	0.008
S-6	Tetrachloroethene	0.06	0.033	0.026	0.021
	Cadmium	0.005	0.003	0.003	0.003
	Lead	0.0075	0.011	0.004	0.004
S-7	Tetrachloroethene	0.06	3.299	0.035	0.031
	1,1,1-Trichloroethane	2	0.891	0.037	0.029
	Trichloroethene	0.06	0.048	0.004	0.004
	Lead	0.0075	0.005	0.004	0.004
S-8	Tetrachloroethene	0.06	0.240	0.057	0.050
	1,1,2-Trichloroethane	0.02	0.036	0.002	0.002
	Trichloroethene	0.06	0.011	0.004	0.003
	Cadmium	0.005	0.007	0.007	0.006

Notes:

VOC analysis by Method 8260B results are presented in mg/kg.

Metals results are from a TCLP extract and are presented in mg/l.

1) Preliminary Remediation Goals (PRGs) and Tier I Residential Soil Migration to Class I Groundwater; Tiered Approach to Corrective Action Objectives.

2) Average concentrations based on 1/2 the Reporting limit for constituents that were not detected.

3) Constituent Concentrations in Soil Meet PRGs and TACO Tier I ROs.

4) Constituent Concentrations in Soil Exceed PRGs and TACO Tier I ROs.

5) 1,2 DCE (Total) ROs based on cis-1,2 DCE (more conservative than trans-1,2 DCE).

6) Due to averaging of results all concentrations are presented to the nearest 0.001

7) Soil averaging assumes the interval 0-32 feet except S-1 which is 0-34 feet.

8) Bold cell border indicates target excavation depth

TABLE 2.3
ESTIMATE OF TETRACHLOROETHENE MASS IN SOIL
OUTSIDE STORAGE AREA
PRE AND POST EXCAVATION
AREA 9/10
SOUTHEAST ROCKFORD GROUNDWATER CONTAMINATION SUPERFUND SITE
ROCKFORD, ILLINOIS

Subarea and Boring Location Number	Average Concentration (mg/kg)	Estimate of Soil Mass in Place (kg)	Estimate of PCE Mass in Place (mg)	Target Excavation Depth (ft)	Average Post Excavation Concentration (mg/kg)	Estimate of Mass Impacted Soil Remaining in Place (kg)	Estimate of Mass of PCE Remaining in Place (mg)	Percentage of PCE Mass Remaining	Percentage of Mass Reduction by Excavation
S-1	32.070	704389	22589755	6	0.238	572316	136211	0.006	0.994
S-2	21.660	991362	21472907	4	0.351	867442	304472	0.014	0.986
S-3	1.340	588621	788753	4	0.099	515044	50989	0.065	0.935
S-4	0.940	712542	669789	4	0.304	623474	189536	0.283	0.717
S-5	1.170	712542	833674	6	0.591	578940	342154	0.410	0.590
S-6	0.034	391327	13305	4	0.026	342411	8903	0.669	0.331
S-7	3.300	635907	2098492	4	0.035	556418	19475	0.009	0.991
S-8	0.240	562533	135008	4	0.057	492216	28056	0.208	0.792
TOTALS	9.171	5299223	48601684		0.237	4548262	1079796	0.022	0.978

Estimate of PCE in Soil:

48.602	kg PCE
107.147	lbs PCE
7.885	gallons PCE

Estimate of PCE Remaining in Soil:

1.080	kg PCE
2.381	lbs PCE
0.175	gallons PCE

Notes:

1) Average concentration based on 0-32 feet interval. Mass calculations are proportional to length and width of each subarea.
2) Uses the TACO Bulk Density for sand of 1.8 g/cm3 which converts to 3033 lbs/yd3.
3) 8.337 lbs of water per gallon.
4) 1.63 Specific Gravity of PCE and Water 1.00.

Methodology:

1) Average Concentrations (mg/kg) = measured during sampling.
2) Estimate of Soil Mass in place (kg) = Sub area (ft2) x Depth (ft)/27 (ft3) x 3,033 (lbs/yd3) of sand/2.2046 (lb/kg).
3) Estimate of PCE Mass in place (mg) = Average Concentration (mg/kg) x Estimate of Soil Mass in place (kg).
4) Target Excavation Depth (ft) = Measured
5) Average Post Excavation Concentration (mg/kg) = Measured
6) Estimate of Mass Impacted Soil Remaining in Place (kg) = Sub Area (ft2) x [Depth (ft) - Target Excavation Depth (ft)]/27 (ft3) x 3,033 (lbs/yd3) of sand/2.2046 (lb/kg).
7) Estimate of Mass of PCE Remaining in Place (mg) = Average Post Excavation Concentration (mg/kg) x Estimate of Mass Impacted Soil Remaining in Place (kg).
8) Percentage of PCE Mass Remaining = Estimate of Mass of PCE Remaining in Place (mg)/Estimate of PCE Mass in Place (mg).
9) Percentage of Mass Reduction by Excavation = 1-Percentage of PCE Mass Remaining.

Based on the current data, the remaining PCE concentrations in soil are not anticipated to exceed the inhalation or ingestion pathway ROs (from TACO) and will likely be within an order of magnitude of the soil component of the groundwater ingestion pathway PRG/TACO RO. The averaged concentrations of cadmium will still exceed the soil component of the groundwater ingestion pathway (PRG/TACO) RO at locations S-4 and S-5 due to elevated concentrations at depth. The averaged lead concentration at S-5 will be 0.008 mg/l and below the soil component of the groundwater ingestion pathway TACO RO of 0.0075 at all other locations.

NATURAL ATTENUATION ENHANCEMENT OPPORTUNITY IDENTIFIED

Based on the information collected in conjunction with the SVE and air sparge pilot tests, there appears to be an opportunity to enhance the natural attenuation in groundwater beneath the OSA. Based on pilot test data, the dissolved oxygen levels in groundwater indicate aerobic conditions. By reducing the dissolved oxygen level in groundwater, anaerobic conditions may be created. These conditions are much more favorable to bacteria which facilitate the reductive dechlorination process.

SECTION 3.0 METHODS AND PROCEDURES

The methods and procedures for completion of the work plan activities including health and safety plan updates, work zone delineation, natural attenuation enhancement, well abandonment, and the excavation, loading, transportation and waste disposal are presented in this section.

HEALTH AND SAFETY PLAN, SITE SECURITY, AND WORK ZONES

The existing SECOR Health and Safety Plan will be revised and updated to include the activities outlined in this work plan. The revisions to the plan will include, but are not limited to, excavation activities, field monitoring equipment and activities, required personal protective equipment (PPE), minimum levels of protection and criteria for upgrade, and excavation sampling procedures.

Site security and work zones will be established. HS has security personnel that restrict access to the facility. There is a guard post located south of the OSA. The chain link security fence around the OSA will be partially removed to facilitate the excavation activities and integration of the area into the facility after completion of the work. Temporary fencing will be used to create exclusion and decontamination zones around the OSA and to block access from HS personnel and others. Permission to close the sidewalk and a portion of a drive lane on 9th Street adjacent to the OSA, as necessary, will be sought from the City of Rockford. If roadway closure is granted by the City of Rockford, a larger exclusion area will be created using the aforementioned fencing and appropriate lane closure signage (based on current IDOT standards). A site layout identifying the approximate exclusion, decontamination, and support work zones is provided as Figure 3.1.

The proximity of the excavation to structures and utilities will require that special care be taken to avoid damaging or in any way compromising the integrity of the adjacent infrastructure. In some areas, excavation walls may require shoring, benching or sloping. This may limit the depth or areal extent of excavations.

All excavations shall be made in accordance with the rules, regulations, requirements, and guidelines set forth in 29 CFR 1926.650 through 1926.652 established by the Occupational Safety and Health Administration for Excavations.

Excavations will be inspected by a competent person to assure that side walls are stable and do not pose a threat to personnel, equipment, or surrounding infrastructure. Inspections will be conducted on the following schedule, at a minimum:

- Daily and before the start of each shift.
- As dictated by the work being done.
- After every rain storm.
- After other events that could increase hazards, such as snowstorm, windstorm, thaw, earthquake, dramatic change in weather, etc.
- When fissures, tension cracks, sloughing, undercutting, water seepage, bulging at the bottom, or other similar conditions occur.
- When there is any indication of change or movement in adjacent structures.

Upon completion of the excavation, backfilling, and transportation of all wastes offsite, all temporary fencing will be removed. During the excavation activities, portions of the security fence may be removed to facilitate the completion of the work. If this is necessary, adequate substitute fencing will be provided as necessary to restrict access.

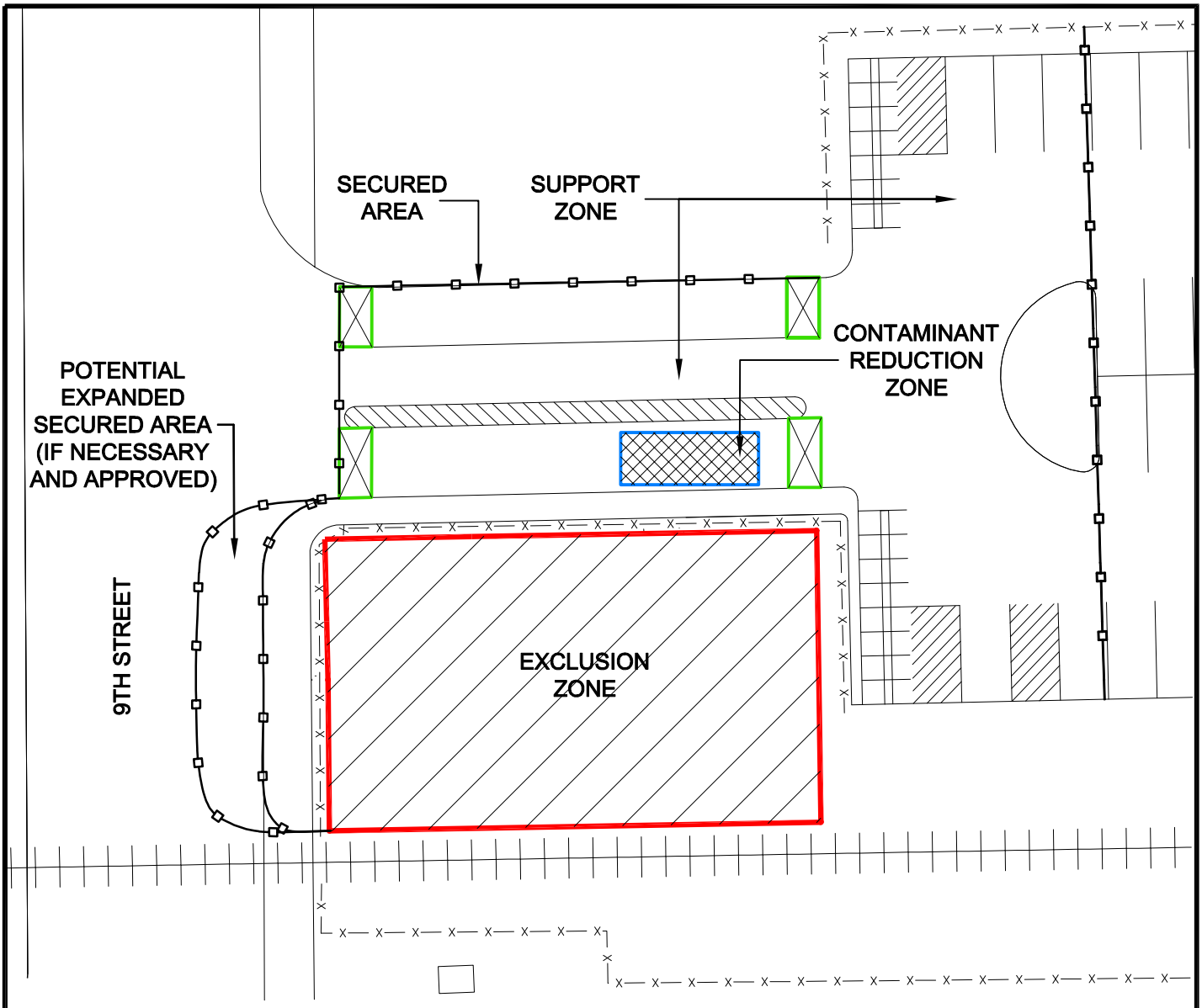

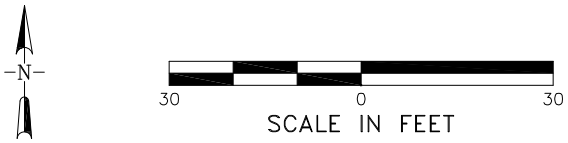

LEGEND:

- ACCESS CONTROL POINTS
- DECONTAMINATION STATION/PAD
- CHAIN-LINK FENCE
- TEMPORARY FENCING
- RAILROAD TRACK

NOTE: THE LOCATIONS AND BOUNDARIES OF THE WORK ZONES ARE APPROXIMATE AND SUBJECT TO MODIFICATIONS BASED ON FIELD CONDITIONS.

DESIGNED BY:	KTW
DRAWN BY:	MWB
APPROVED BY:	DMC
DATE:	03-21-05

SECOR

EXCAVATION WORK ZONES
HAMILTON SUNDSTRAND
ROCKFORD, ILLINOIS

JOB NO. 13UN.02072.05.0001 FIGURE 3.1

AIR MONITORING

Ambient and personal breathing space air monitoring will be undertaken as part of this effort. The site specific health and safety plan for the continuing work at this facility will be amended to incorporate the excavation activities. Air monitoring using an 11.7 eV photoionization detector (or equivalent) will be implemented within the work zone and periodically at the work zone perimeter. Threshold levels will be established for worker upgrades in level of PPE and for cessation or modification of work practices if certain trigger values are reached in the perimeter monitoring program. If concentrations of volatile organic compounds are detected at the property line on a sustained basis in excess of one ppm above background the corrective action measures and contingency planning options will be reviewed and implemented.

CORRECTIVE ACTION MEASURES AND CONTINGENCY PLANNING

Corrective action measures and contingency planning options are proposed to ensure that HS employees and the general public are not exposed to potentially harmful levels of airborne contamination. If sustained VOC emissions are observed at the property line at levels above one ppm background the following options will be reviewed to determine the most appropriate and effective means to reduce airborne emissions:

1) Temporary cessation of work;
2) Modification of excavation methods to reduce the surface area of impacted soil exposed to the atmosphere;
3) Modification of other excavation methods or practices which facilitate the volatilization of constituents;
4) Use of vapor suppressing foam, water, or other liquids or gases;
5) Reevaluate the work zone perimeter and expand the exclusion and other work zones as appropriate to minimize the potential for exposure to the public; and
6) Alter the pace, location, or material loading procedures.

NATURAL ATTENUATION ENHANCEMENT

To take advantage of the existing network of pilot testing points/wells in place in the OSA, a groundwater amendment will be introduced to create more favorable natural attenuation conditions. These wells are within or in close proximity of the water table and provide an opportunity to introduce a natural attenuation enhancement product fairly evenly over the OSA area through the existing infrastructure prior to the abandonment of the wells.

A Regenesis® product, Hydrogen Release Compound Extended Release Formula (HRC-X), will be introduced into the groundwater underlying the OSA through the screened portion of the existing access points (wells). HRC-X is a glycerol polylactate product which slowly releases hydrogen into groundwater for an extended period of time and creates anaerobic conditions which facilitate the biodegradation process for chlorinated volatile organic compounds.

The product is a water soluble, non toxic, food-grade material which was designed to be environmentally safe. The exact amount of HRC-X to be introduced will be determined based on the presence and levels of other electron acceptors in groundwater such as dissolved oxygen, nitrate, iron, manganese, and sulfate. Groundwater information and analytical data for these parameters will be collected prior to field application. HRC-X is anticipated to create even more favorable conditions for natural attenuation. Information regarding the HRC-X product and a generic spreadsheet used to determine an appropriate amount of product for introduction into the groundwater is provided in Appendix B. Additional information is also available at www.regenesis.com. HRC-X is a viscous liquid. To facilitate introduction into the subsurface through the existing wells it will be mixed with water to reduce its viscosity. The HRC-X mixture will be introduced to the wells using a GS200 grout pump (or equivalent).

The HRC-X will be introduced prior to decommissioning of the wells and placed within the upper portion (15 feet) of the aquifer. The HRC-X slurry will be placed in the deepest vapor monitoring points which are screened to within a few feet of the

groundwater surface and into the air sparge and air sparge detection monitoring wells prior to abandonment.

Aquifer parameters including dissolved oxygen (DO) and oxidation reduction potential (ORP) will be monitored before and after the placement of the HRC- X material to provide an indication of the affect of the HRC-X on groundwater conditions. Additional monitoring, evaluation, and other potential remedial aspects for this area will be included in the operations, maintenance, and monitoring plan for the Area 9/10 Remedial Design.

WELL ABANDONMENT

The existing wells in the OSA will be abandoned in accordance with the Illinois Water Well Construction Code Section 920.120 in preparation for the excavation activities. The soil vapor extraction, air sparge, vacuum monitoring, and air sparge monitoring wells or points with a depth greater than five feet will be properly abandoned by filling the well annulus with a cement bentonite slurry installed via tremie pipe to a depth of four feet bgs. The near ground surface portion of the well risers will be removed in connection with the OSA excavation activities. The shallow wells (five feet or less in depth) will be completely removed as part of the excavation activities.

WASTE CHARACTERIZATION

There is a waste characterization profile from previous investigation work in the OSA that is active and current. SECOR will confirm acceptance of the excavation waste material under the existing profile with the selected disposal facility or determine if additional characterization is required. If necessary, waste characterization samples will be collected and analyzed and submitted to the hazardous waste disposal facility for acceptance. The material will be manifested and shipped under characteristically hazardous waste code F002 or other as determined by the characterization analysis.

EXTENT OF EXCAVATION ACTIVITIES AND CONSTRAINTS

The extent of excavation will be the entire OSA area to the target depths identified. The excavation area is bounded immediately to the west by a public sidewalk and right of way which contains utilities, to the south by a local spur line of the Illinois Central Railroad, to the east by a grass and landscaped area, and to the north by an asphalt access road to the HS employee parking lot. Utilities locations are a concern with regard to the excavation work. The overhead electric line will be shielded, temporarily taken out of service, or moved to facilitate the excavation activities. The location of underground public utilities will be identified by a Joint Utilities Locate Identification for Excavators (JULIE) call and facility utilities will be identified by a private utility locate. The railroad will also identify if there are any underground signal lines in the vicinity.

There are two primary factors that will present constraints on the excavation activities:

1) Health and safety considerations – a potential exists of undermining utilities, sidewalk, roadways, and railroad tracks adjacent to the OSA endangering SECOR employees, subcontractors, HS employees, and the general public. The cohesiveness of the site soils, soil moisture content, and weather conditions at the time of excavation will all be factors in how complete excavation can be made up to the perimeter of the OSA.

2) Property boundary, existing right of way (public and railroad) and utility easements – the structural integrity of existing infrastructure (utilities, sidewalk, railroad tracks) must not be compromised. The HS property lines, identified site and public utilities, and surface infrastructure (sidewalk, roads, etc.) are shown on Figure 1.3.

To address these concerns the soil excavation may be sloped, benched, spot dug and backfilled, or temporary supporting structures (trench box or excavation shield) may be used to minimize the potential for: 1) excavation wall collapse, 2) potential undermining the stability of the excavation equipment, or 3) potential damage to public or private infrastructure (utilities, sidewalk, road, rail line). Additionally all contractors, surveyors,

SECOR personnel, and others working within the the railroad lease area will need to be registered with E-Railsafe.com. A qualified flag person will be required during all work within 25 feet of the railroad track.

EXCAVATION EQUIPMENT, LOADING, AND TRANSPORT

The excavation work will be completed using a track backhoe excavator (or equivalent). The concrete pad will be scored with a concrete saw and broken into manageable pieces using a backhoe as part of excavation activities. The concrete and impacted gravel will be disposed along with the waste material. The excavated soil will be loaded into lined container boxes with tarps or loaded directly into trucks with lined boxes with tarps. The trucks for transport will remain outside of the OSA. The material will be transported by truck to the designated facility.

HAZARDOUS WASTE DISPOSAL

The waste will be shipped to a HS approved hazardous waste disposal facility. HS has contractual agreements with a number of disposal facilities. Once final selection of the disposal facility is confirmed and the waste is accepted for shipment SECOR will provide this information to the USEPA and IEPA.

DECONTAMINATION

A temporary decontamination pad will be established in the HS paved area to the north of the OSA. A pad made with impermeable polyethylene sheeting will be placed on the asphalt and sloped for water collection. All excavation equipment will be decontaminated using a steam cleaner and/or pressure washing equipment. The decontamination water will be containerized and staged within the decontamination or exclusion zone. Upon project completion (or before as necessary) the wastewater will be characterized, transported offsite, and properly disposed at a HS approved facility. All soil from decontamination activities will be disposed along with the site soils.

Work-generated solid waste (used PPE, plastic sheeting, etc.) will be visually inspected. If inspection indicates the materials may be contaminated, it will be disposed along with the waste material. If no evidence of contamination is present, the materials will be double bagged (trash bags) and disposed in an onsite dumpster for ultimate disposal in a sanitary landfill.

EXCAVATION SAMPLING

Upon completion of excavation activities in a specific area, base and wall samples, as appropriate, will be collected. The soil samples will be obtained using the backhoe bucket or other sample collection device, as appropriate. Personnel will not enter the excavation for sampling activities at any location greater than four feet deep. Samples will be collected halfway up the sidewall whether vertical or sloped. Base and wall samples will be collected on approximately 20 feet intervals. At a minimum, three samples from each wall will be collected for a total of 12 wall samples around the perimeter of the OSA. Base samples will also be collected on approximately 20 feet centers. This is estimated to result in a total of nine base samples. The base samples will likely be at different depths below ground surface as the target excavation depths will vary. Representative wall and base sample locations are shown on Figure 3.2. Representative samples will be collected at locations based on the criteria in the following order: 1) safe sample collection, 2) location and depth of base or wall face area for that portion of the excavation, 3) visual or PID indication of impact. Actual sample locations will be based on the post-excavation dimensions.

Samples will be collected, packaged, and preserved in the same manner described in the approved Field Sampling Plan for drilling soil samples with the exception that these samples will be collected by other than drilling equipment. Two soil duplicate samples (1 per 20 samples) for Quality Assurance/Quality Control (QA/QC) are planned. The laboratory will run and report MS/MSD analyses on a 1 per 20 sample basis. No field sampling blanks will be collected. Trip blanks will accompany each shipment of samples sent for analysis. The samples will be submitted to STL Laboratories in University Park, Illinois for the target analyses (VOCs, TCLP metals). No TPH DRO analysis is

warranted as the comprehensive sampling completed as part of the Pre-Design Investigation in this area had no TPH DRO detections in any of the samples.

The samples will be identified using the following nomenclature which has been slightly modified from the Field Sampling Plan (FSP) protocol.

OSA - SR– MMYY –W1	Whereas:	OSA = Outside Storage Area
OSA – SR – MMYY –B1		SR = Source Reduction
		MM = Month
		YY = Year
		W = Wall Sample
		B = Base Sample
		1 = Sequential Numbers

Sample collection from the interior walls within the excavation area has been contemplated but in practice will not be possible as these interior walls will not necessary exist. The difference in depths between some of the excavation subareas (e.g., S-1 and S-5 versus the others) is approximately two feet. In the field, during the implementation of the excavation effort it is very likely that there will be an angled slope in the floor of the excavation as opposed to a sheer vertical wall in the vicinity of the depth changes. As a result potential interior walls sample locations would essentially be additional base samples.

The excavation base sample locations were selected on a grid basis (approximately 20 feet spacing) to supplement the existing and more comprehensive continuous interval soil sampling already completed. The base samples will include three locations within the subareas around S-1 and S-2 and another location by S-5. From the eight borings which were continuously sampled approximately, 110 sample data intervals will remain after excavation across the 65 feet by 50 feet area. This data, combined with the additional 21 wall and base samples planned, will provide a very high density of representative analytical data of the soil remaining within the OSA. Therefore sampling of the interior walls (if possible) is not anticipated.

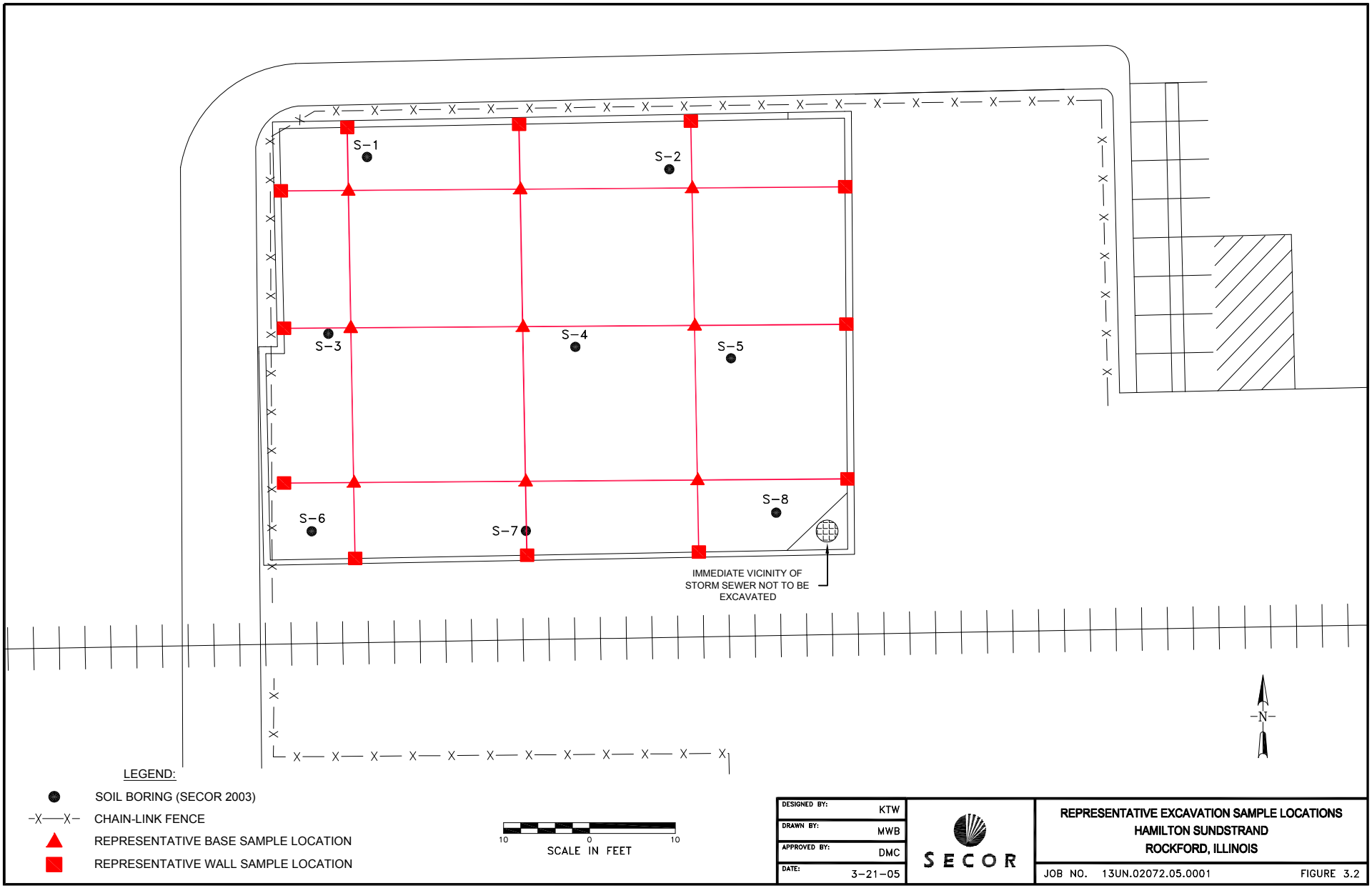

DESIGNED BY:	KTW
DRAWN BY:	MWB
APPROVED BY:	DMC
DATE:	3-21-05

SECOR

REPRESENTATIVE EXCAVATION SAMPLE LOCATIONS
HAMILTON SUNDSTRAND
ROCKFORD, ILLINOIS

JOB NO. 13UN.02072.05.0001 FIGURE 3.2

EXCAVATION BACKFILLING

The timing and manner of backfill placement will be dictated by the actual site and soil conditions. If existing infrastructure or utilities are considered vulnerable, backfill placement will be completed immediately following the excavation and sampling activities. Shoring is not anticipated to be required. The excavation will be backfilled with clean fill material from a documented source. At a minimum, the top three feet of fill will be a clay soil. In the past, one or more feet of clean pea gravel was placed over the concrete pad and OSA area for aesthetic purposes. Some of this material may be used for deeper backfill as deemed appropriate.

CLAY CAP PLACEMENT

The clay cap will be installed to mimic the existing (relatively flat) grade. The top three feet of backfill material will be clean clay soil. The soil will be placed in one foot lifts over the excavated area and compacted with the excavating equipment. The area will then be top dressed with suitable topsoil and seeded with grass to minimize erosion and for aesthetic purposes. Additional erosion control is not anticipated to be required.

SECTION 4.0 DOCUMENTATION

After completion of the SMMRWP activities, a summary report documenting the work will be prepared. The report will consist of a brief narrative of the natural attenuation enhancement data collection and HRC-X introduction, well abandonment, excavation, and backfilling activities. The report will also include a figure identifying the actual boundary of the OSA excavation activities, a presentation of all analytical data in tabular format, a comparison of the analytical results with PRG/TACO ROs, well abandonment documentation, and a summary of all material transported on and offsite. The following provides additional description of several key portions of the report.

NATURAL ATTENUATION ENHANCEMENT

A summary of the activities completed to enhance the natural attenuation in the area will be provided including the field measurements and analytical results of groundwater electron acceptors, the amount of HRC-X supplied, the completed HRC-X calculation worksheet, and a narrative of the introduction method.

WELL ABANDONMENT

A narrative of the procedure and completed Illinois Department of Public Health water well abandonment forms will be provided.

EXCAVATION MASS REDUCTION ACTIVITY REPORTING

The actual excavation area in both areal extent and vertically by subarea will be documented. This will be correlated with the volume/weight of the material transported offsite under manifest. Copies of the waste manifests will be provided. The soil volume and contaminant concentrations previously documented will allow for an estimation of the mass reduction accomplished by this effort.

EXCAVATION SAMPLING ANALYSIS AND EVALUATION

The report will provide a summary of the excavation wall and base sample data and a comparison of those concentrations with the PRGs specified in the ROD, 35 IAC 742 TACO ROs, and ROs identified in the IEPA correspondence dated July 22, 2004.

EXCAVATION BACKFILL AND CLAY CAP CONSTRUCTION

The source(s), types, and volumes of backfill material will documented and summarized. The manner of placement of the clay material and means of compaction will also be provided. A description of the steps taken to record the cap as a engineered barrier or a copy of the document recorded on the property deed restricting future development activities and protection of the cap will be provided.

PHOTOGRAPHIC DOCUMENTATION

Photographic documentation of the OSA prior to, during, and after completion of the activities in this work plan will be provided.

APPENDIX A

USEPA Approval Letter and Comment Response

- USEPA Letter Dated August 15, 2005
- SECOR Letter Response to USEPA and IEPA Comments Dated June 28, 2005

USEPA LETTER DATED AUGUST 15, 2005

RECEIVED

AUG 17 2005

United States Environmental Protection Agency
Region 5
77 West Jackson Boulevard
Chicago, Illinois 60604

August 15, 2005

Mr. David M. Curnock
SECOR International Incorporated
446 Eisenhower Lane North
Lombard, Illinois 60148

Re: Outside Storage Container Area - Source Area 9/10
Southeast Rockford Groundwater Contamination Site

Dear Mr. Curnock:

The United States Environmental Protection Agency (U.S. EPA) is in receipt of materials prepared June 28, 2005 by your firm. The June 28 document provided response to comments developed by U.S. EPA and the IL EPA with regard to the Outside Storage Container Area (OSA) Source Material Mass Reduction Work Plan.

U.S. EPA understands that the means of contaminant mass reduction proposed for the OSA is to employ excavation so as to remove most of the contaminated soil. Within the OSA, the majority of soil contaminants appear to be located within the first 4-6' of soil depth, unlike other portions of Source Area 9/10 where contaminants are found at deeper locations. Contaminated soils thus excavated would undergo off-site shipment to a suitable disposal facility.

U.S. EPA understands that the soil vapor extraction and air sparging technologies selected in the June 11, 2002 Record of Decision for Operable Unit #3 would be employed elsewhere at Source Area 9/10 beyond the OSA.

U.S. EPA further understands that two other important aspects of proposed OSA Mass Reduction work are: 1.) Usage of a groundwater additive which would tend to promote anaerobic conditions in nearby aquifer regions, thereby in theory facilitating microbial biodegradation of chlorinated species in groundwater, which constitute most of the groundwater contaminants of concern; and, 2.) Backfilling excavated OSA areas after removal of contaminated soils, making use of clean soils and/or gravel for fill materials, and placing a simple cap - such as of clay or asphalt - over the backfilled area. This would be done as a means of assuring site user safety and minimizing subsequent water infiltration into the previously excavated area.

Upon review of the work plan comment responses as noted in the June 28, 2005 document, and after opportunity to confer with IL EPA, U.S. EPA approves of the work plan as modified by the responses to agencies comments subject to the following conditions:

- Air monitoring discussion in the comment responses appears satisfactory. However, contingency shall be made, if necessary, for the occurrence of encountering unusually high or threatening ambient vapor levels. Since Source Area 9/10 is in a significant industrial area, air monitoring performed to ensure site user, worker, and nearby personnel safety may need to be set up so as to verify that any emissions of concern are related to OSA excavation work. A list of possible corrective actions or contingencies should be noted in the work plan. U.S. EPA suggests that the presence of atmospheric volatile emissions in excess of 1 ppm above background at the property boundary due to OSA-related work may be reason to consult contingency portions of the work plan. Such contingency could consist of work schedule alteration, and/or employment of vapor-suppressing foams, as the circumstances may dictate.

- U.S. EPA be given opportunity to review proposed locations, and means of materials and installation techniques used for new proposed groundwater monitoring wells which would be used to help gauge the effectiveness of the pilot program of groundwater additives employed for enhanced biodegradation of main aquifer contaminants.

- U.S. EPA be given opportunity to receive, as a remedial design deliverable document, sampling results from any newly installed groundwater monitoring wells as discussed in the previous condition. Likewise, as confirmation soil sampling results become available to check on degree of contaminant removal after excavation performance, these results are to be provided to U.S. EPA and IL EPA for review consideration.

- That within 15 business days time of cap installation over the excavated/backfilled OSA area, SECOR's client in this matter, Hamilton Sundstrand, shall initiate necessary steps to place on site property deed restrictions or restrictive covenants, giving due notice of the cap's existence, such that the cap is adequately protected from undue harm by future site usage or development. For example, the cap should be protected from utility line installation or repair. U.S. EPA shall receive notice of the filing of any pertinent deed restrictions or restrictive covenants involving said cap.

- SECOR and Hamilton Sundstrand understand that U.S. EPA, working in cooperation with IL EPA, needs to place a revised (final) version of the work plan into the site's information repository and Administrative Record. Hence, a proposed final work plan indicating remedial objectives are based on June 11, 2002 Record of Decision cleanup criteria for Source Area 9/10 (not TACO) should be generated and sent to U.S. EPA and IL EPA.

Thank you for your attention to these items. This constitutes work plan approval with modifications noted. However, SECOR and Hamilton Sundstrand should understand that actual field work performance - other than initiation of advisable monitoring checkpoints and access

permission arrangements - should not be conducted until after Source Area 9/10 Outside Storage Container Area Explanation of Significant Differences (ESD) signature. U.S. EPA will advise you of progress regarding the ESD.

Yours truly,

Russell D. Hart

Russell D. Hart, RPM

cc:
T. Turner, ORC
T. Williams, IL EPA

SECOR LETTER RESPONSE TO USEPA AND IEPA COMMENTS DATED JUNE 28, 2005

SECOR

SECOR
INTERNATIONAL
INCORPORATED

www.secor.com
446 Eisenhower Lane North
Lombard, IL 60148
630-792-1680 TEL
630-792-1691 FAX

June 28, 2005

Mr. Russell Hart
United States Environmental Protection Agency
Region V
77 West Jackson Boulevard
Chicago, Illinois 60604-3590

RE: OSA Source Material Mass Reduction Work Plan Comment Response
Area 9/10, Remedial Design
Southeast Rockford Groundwater Contamination Superfund Site
Rockford, Illinois

Dear Mr. Hart:

As a follow-up to our recent meeting and discussion, on behalf of Hamilton Sundstrand (HS), SECOR International Incorporated (SECOR) is providing a response to comments received from United States Environmental Protection Agency (USEPA) and the Illinois Environmental Protection Agency (IEPA) regarding the Outside Storage Container Area (OSA) Source Material Mass Reduction Work Plan (the Plan). The USEPA comments were contained in an electronic-mail message from Mr. Russell Hart to Mr. David Curnock, SECOR, dated May 3, 2005. IEPA comments were submitted to the USEPA in a letter dated May 13, 2005 and subsequently forwarded on to SECOR by the USEPA in correspondence dated May 23, 2005. Copies of both USEPA and IEPA comment correspondence are attached to this letter as reference. The format of this response letter presents the Agency comment followed by the HS/SECOR response.

USEPA OSA REVIEW DATED MAY 3, 2005

1) **Comment:**

"What provisions are to be made for air monitoring at the OSA perimeter such that assurance is provided that day-to-day Hamilton Sundstrand and other plant visitors are not adversely impacted by VOC vapor levels that could be related to excavation work conducted within the OSA? It would seem appropriate to have such monitoring capability in order to cease operations if necessary if VOC levels became too high. This reasoning would apply to adequate protection of nearby off-site personnel (residential areas, nearby shops, places of commerce, etc.)."

Response:

Ambient and personal breathing space air monitoring will be undertaken as part of this effort. The site specific health and safety plan for the continuing work at this facility will be amended to incorporate the excavation activities. Air monitoring using an 11.7 eV photoionization detector (or equivalent) will be implemented within the work zone and periodically at the work zone perimeter. Threshold levels will be established for worker upgrades in level of personnel protective equipment (PPE) and for cessation or modification of work practices if certain trigger values are reached in the perimeter monitoring program.

2) **Comment:**

"Introduction of the Hydrogen Release Compound – This procedure may have interest as a pilot application, but I think it may be premature to consider this a means of control for potential low-grade future groundwater sources for any significant portion of the overall plume or groundwater management zone. If I understand the proposed work plan correctly, certain existing monitoring wells within the OSA where excavation may proceed are to be dismantled and abandoned in accordance with IL EPA procedures on this subject. Then, after excavation the hydrogen releasing compound is to be introduced via slurry/solution injection. What wells are to be established to verify that the compound is indeed having a positive effect on VOC levels? Lacking such wells, it would seem difficult/impossible to be able to make a determination about the specific results using this compound. If one of the features of this compound is to enhance anaerobic conditions as opposed to aerobic conditions in groundwater, what monitoring, either of oxygen levels, populations of aerobic/ anaerobic microbes will occur to help relate "cause and effect" associations that may be related to changes in VOC levels in groundwater after application? I appreciate that this technique may serve as a secondary means of source control, and may provide reassurance especially to State RCRA reviewers if excavation alone does not fully attain soil clean-up goals within the OSA. However, I would think that regulatory agency personnel would want to know some verifiable means of knowing what area/depth this slurry injection is affecting."

Response:

The introduction of the hydrogen release compound (HRC-X) is being proposed based on the "opportunity" presented by having the pilot study monitoring points in place at this time. The HRC-X would be introduced prior to decommissioning of the wells. The hydrogen release compound – extended release formula (HRC-X) will be placed within the upper portion (15 feet) of the aquifer. The HRC-X slurry will be placed in the deepest vapor monitoring points which are screened to within a few feet of the groundwater surface and into the air sparge and air sparge detection monitoring wells prior to abandonment. Aquifer parameters including dissolve oxygen (DO) and oxidation reduction potential (ORP) will be monitored before and after the placement of the HRC- X material to provide some indication of the affect that HRC-X would have on the groundwater conditions. Additional monitoring, evaluation, and other potential remedial aspects for this area would be integrated into the overall Remedial Design for Area 9/10 which has yet to be developed.

3) **Comment:**

"The work plan divides the OSA zone into 8 subportions, based on soil boring results. For 6 of these 8 zones, it is projected that excavation to a depth of 4 feet will be adequate to attain – if not "final" soil cleanup goals, then at least sufficient mass removal to justify excavation cessation provided that some capping and/or material limiting further movement of contaminant mass into groundwater is applied. For 2 of the 8 zones, it is projected that excavation to 6 feet will be necessary. Soil constituent content after

excavation is depicted in Table 2.2. Figure 3.2 depicts points showing "representative base sample location" and "representative wall sample location". In looking at the suggested wall sample locations, it appears that while the perimeter of the overall OSA area would get adequate sample coverage to verify reaching/satisfactorily approaching desired soil cleanup values, I am not so sure about the interior of the OSA zone. Shouldn't there be some verification sampling to go along with the inner walls of the eight zones for which soil borings were performed? This would seem especially important for the zones for which contaminant soil levels were quite high – zones S-1 and S-2 – and also for the zones where excavation is projected to be needed to go to the 6' depth level – in this case zones S-1 and S-5."

Response:

The aspect of the additional sample collection from the interior walls within the excavation area is understood in theory, however, in practice it may not be possible as these interior walls will not necessary exist. The difference in depths between some of the excavation subareas (e.g., S-1 and S-5 versus the others) is approximately two feet. In the field implementation of the excavation effort it is very likely that there will be an angled slope in the floor of the excavation as opposed to a sheer vertical wall in the vicinity of the depth changes. As a result the interior walls, sample locations would essentially be additional base samples.

The excavation base samples planned were selected on a grid basis (approximately 20 feet spacing) to supplement the existing and more comprehensive continuous interval soil sampling already completed. The base samples planned will include three locations within the subareas around S-1 and S-2 and another location by S-5. From the eight borings which were continuously sampled approximately, 110 sample data intervals will remain after excavation across the 50 feet by 65 feet area. This data, combined with the 21 wall and base samples planned, is anticipated to provide representative analytical data of the soil remaining within the OSA. Additional sampling of the interior walls (if practical) would provide limited additional information as the data density in this area is already very high.

IEPA LETTER DATED MAY 13, 2005

1) **Comment:**

"Illinois EPA is recommending that UTC/HS take necessary precautions as best that can be expected on groundwater monitoring wells to prevent unauthorized entry."

Response:

Agreed.

2) **Comment:**

"The use of Illinois Administration Code 35 IAC Part 742 in reference to remediation objectives is inappropriate. The Tiered Approach to Corrective Objectives part 742 is not an ARAR for the Southeast Rockford Groundwater Contamination Site (SERGC). The applicable ARAR for this situation is 35 Ill. Adm. Code Part 620.410, therefore, any references of use of 35 Ill. Adm. Code Part 742 is as a screening tool only. All remediation objectives for the site including Source Area 9/10 are stated in the ROD for the SERGC signed in 2002."

Response:

The references to Tiered Approach to Corrective Action Objectives (TACO) 35 IAC 742 were for comparison purposes only. HS/SECOR are aware that the Preliminary Remediation Goals for Area 9/10 are prescribed in the Record of Decision (ROD) dated May 2002. Although not listed as an ARAR, the predecessor guidance to this regulation (35 IAC 742) was used in the derivation of the Preliminary Remediation Goals. With respect to the constituents of concern and the soil objectives to be applied, the Preliminary Remediation Goals in the ROD and the TACO remediation objectives are the same.

The OSA is a former RCRA unit which is subject to 35 IAC 725 regulations in addition to the conditions of the ROD. To address the overall environmental issues at the site including the ROD (which included Preliminary Remediation Goals) and RCRA responsibilities, a simplified comparison 35 IAC 742 was made. This was done for two reasons: 1) the constituents of concern in the OSA listed in the Preliminary Remediation Goals are the same as the TACO Tier I remediation objectives and derived by the same means, and 2) there are other constituents present at the OSA which are regulated under RCRA which are not part of the ROD but have specified remediation objectives in TACO.

The remedial objectives for constituents regulated under RCRA are subject to 35 IAC 742 TACO. Also, while the site groundwater is subject to 35 IAC 620 regulations, these are groundwater quality regulations only and do not address constituent concentrations in soil.

3) **Comment:**

"In addition to Ill. Adm. Code Part 620, UTC/HS needs to comply with the ARAR, Ill. Adm. Code Part 724 in use of Remediation Objectives and final closure requirements for the former OSA unit. This is specifically directed to UTC/HS in a letter dated October 15, 2002 with specific requirements listed in Attachment A of the letter. The submitted work plan to remove source material will definitely assist in achieving the post closure requirements, however, it will not complete them pursuant to Ill. Adm. Code Part 724 Subparts F (Releases form Solid Waste Management Units) and G Post (Closure and Post-Closure) requirements."

Response:

Final closure of the OSA is not being sought at this time. In the appendix of the letter dated October 15, 2002, it is stated that the site is subject to 35 IAC 725 interim status regulations. At the appropriate time, the request for final closure will address those requirements in 35 IAC 725.

4) Comment:

"Future work plan submittals need to make note of specific requirements of comments 2 and 3 and how these specific ARARS and outstanding RCRA issues will be met."

Response:

Future work plans will address appropriate remediation goals or objectives and how the planned activities address issues with respect to RCRA.

5) Comment:

"Use of Ill. Adm. Code Part 742.225(c) that states, continuous interval soil samples were averaged at each boring location. Illinois EPA realizes that this was done in an effort to help facilitate mass reduction of hazardous materials through excavation. This assumption however, to average soil samples with VOCs exceeding the soil saturation limits indicates that the soil may exceed Ill. Adm. Code 721.123, therefore, averaging soil sample results may not be appropriate pursuant to CERCLA and the NCP as opposed to comparison of discrete sample results for analysis."

Response:

The averaging of concentrations from continuously sampled soil intervals was used to determine and estimate the mass of constituents and evaluate the benefit of excavation and off-site disposal on a per lift basis. Upon review of the sample analytical data, at this time it does not appear that the two sample intervals where the soil saturation limit was exceeded will present an issue with respect to reactivity per 35 IAC 721.123.

6) Comment:

"After the excavation is completed remaining levels in soil of metals and VOCs shall be compared to Remediation Objectives in the ROD for review. The potential effectiveness of the proposed RA work is premature at this point until Illinois EPA and U.S. EPA have evaluated a submitted design."

Response:

As noted in comment number 2, the ROD does not provide preliminary remediation goals for the metals of potential concern in the OSA (lead and cadmium). HS will compare the

existing data and post excavation base and wall soil analytical data with the appropriate remediation objectives. HS agrees that a determination of the potential effectiveness of the source material reduction work is premature. HS plans to incorporate additional monitoring, evaluation, and any potential remedial actions for the OSA into the Remedial Design for Area 9/10.

7) **Comment:**

"The proposed procedure to enhance natural attenuation may require UTC/HS to expand the parameters of the groundwater sampling to determine if anaerobic conditions are being created. Groundwater monitoring wells will need to be placed in such a manner as to verify the effectiveness of this procedure for long and short-term evaluation. Illinois EPA does have the intention of installing down-gradient groundwater monitoring wells as part of monitoring natural attenuation and monitoring the effectiveness of all RA work in Area 9/10."

Response:

HS plans to monitor dissolved oxygen (DO) and oxidation reduction potential (ORP) in the wells within the OSA prior to and after the placement of the hydrogen release compound extended release (HRC-X) material for short term evaluation. Additional groundwater monitoring wells would assist in this effort. Long term efforts by HS will be incorporated into the Remedial Design for Area 9/10.

8) **Comment:**

"Copies of well abandonment reports should also be forwarded to Illinois EPA as well as the other appropriate State Agencies."

Response:

Copies of the well abandonment forms will be provided to IEPA as part of the documentation of the work plan activities as outlined in Section 4.0 of the Plan. The forms will also be submitted to other appropriate State Agencies, including the Illinois Department of Public Health as required.

9) **Comment:**

"Waste disposal needs to meet the requirements set forth in the ROD as well as meeting Federal and State of Illinois requirements. Illinois EPA NPL unit and U.S. EPA should receive copies of waste disposal manifests and other appropriate documentation."

Response:

The waste disposal planned will meet the requirements set forth in the ROD, as well as all other State and Federal requirements. As indicated in Section 4.0, copies of the waste disposal manifest will be submitted as part of the documentation of the work plan activities.

10) Comment:

"A corrected copy of this work plan will be required for placement into the repositories that in particular addresses comments 2 and 3."

Response:

This response is intended to serve as an addendum to the work plan and a means to address and clarify the issues raised in comments 2 and 3.

11) Comment:

"If UTC/HS is going to rely on sample collection in the excavated area as verification of removal, other potential sampling may be necessary to verify what contaminant concentrations actually. During the excavation process UTC/HS will need to perform air monitoring to minimize exposure risk form inhalation of VOCs."

Response:

The planned excavation wall and base samples (21 samples total) combined with the continuous soil sampling effort already completed (continuously on two feet intervals from four feet or six feet to 32 feet at eight locations – 110 samples) appear to be adequate to determine what constituent concentrations remain in the OSA, as well as what is to be removed. Air monitoring will be performed during the excavation activities (also, see USEPA comment 1).

12) Comment:

"The placement of a clay cap of three feet is satisfactory for short-term acceptance, however, if contaminants of concern (COCs) are to be left in place. This cap and the materials from which it is constructed may need to be reevaluated for the long-term remedy. Metals left behind that exceed Remediation Objectives (ROs) in the ROD may require a cap that will stop infiltration of precipitation sufficiently to meet the requirements of Ill. Adm. Code Part 620."

Response:

Placement of the clay cap at the OSA is a positive interim measure that will minimize infiltration. The presence of the clay cap and the suitability of the materials of construction will be evaluated as part of the final remedial design activities.

13) **Comment:**

"If COCs that exceed ROs are to remain in place, institutional controls will be necessary."

Response:

Institutional controls will be considered as part the final remedial design.

We appreciate the USEPA's and IEPA's cooperation and involvement in keeping the Area 9/10 Remedial Design effort moving on an appropriate course. As always, if you have any questions, please do not hesitate to call.

Sincerely,
SECOR International Incorporated

David M. Curnock
Principal Scientist

attachments: May 3, 2005 Electronic Mail to SECOR from USEPA
May 13, 2005 Letter to USEPA from IEPA

cc: Mr. Scott Moyer, HS/UTC
Ms. Kathleen McFadden, UTC
Mr. Brian Yeich, UTC
Mr. Thomas Turner, USEPA
Mr. Thomas Williams, IEPA
Mr. Terry Ayers, IEPA

ATTACHMENT

May 3, 2005 Electronic Mail to SECOR from USEPA

and

May 13, 2005 Letter to USEPA from IEPA

RUSSELL HART/R5/USEPA/US
05/03/2005 11:44 AM

To

Subject Area 9/10 - Review - Outside Container Storage Area - Mass Reduction Work Plan

Dear Mr. Curnock - I have received a copy of the above-noted document, dated April 27, 2005. (I look forward to also receiving overall Area 9/10 conceptual design information, and horizontal drilling proposals). In reviewing the OSA Source Material Mass Reduction Work Plan, I have three main areas of comment:

1.) What provisions are to be made for air monitoring at the OSA perimeter such that assurance is provided that day-to-day Hamilton Sundstrand and other plant visitors are not adversely impacted by VOC vapor levels that could be related to excavation work conducted within the OSA? It would seem appropriate to have such monitoring capability in order to cease operations if necessary if VOC levels became too high. This reasoning would apply to adequate protection of nearby off-site personnel (residential areas, nearby shops, places of commerce, etc.).

2.) Introduction of the Hydrogen Release Compound - This procedure may have interest as a pilot application, but I think it may be premature to consider this a means of control for potential low-grade future groundwater sources for any significant portion of the overall plume or groundwater management zone. If I understand the proposed work plan correctly, certain existing monitoring wells within the OSA where excavation may proceed are to be dismantled and abandoned in accordance with IL EPA procedures on this subject. Then, after excavation the hydrogen releasing compound is to be introduced via slurry/solution injection. What wells are to be established to verify that the compound is indeed having a positive effect on VOC levels? Lacking such wells, it would seem difficult/impossible to be able to make a determination about the specific results using this compound. If one of the features of this compound is to enhance anaerobic conditions as opposed to aerobic conditions in groundwater, what monitoring, either of oxygen levels, populations of aerobic/anaerobic microbes will occur to help relate "cause and effect" associations that may be related to changes in VOC levels in groundwater after application? I appreciate that this technique may serve as a secondary means of source control, and may provide reassurance especially to State RCRA reviewers if excavation alone does not fully attain soil clean-up goals within the OSA. However, I would think that regulatory agency personnel would want to know some verifiable means of knowing what area/depth this slurry injection is affecting.

3.) The work plan divides the OSA zone into 8 subportions, based on soil boring results. For 6 of these 8 zones, it is projected that excavation to a depth of 4 feet will be adequate to attain - if not "final" soil cleanup goals, then at least sufficient mass removal to justify excavation cessation provided that some capping and/or material limiting further movement of contaminant mass into groundwater is applied. For 2 of the 8 zones, it is projected that excavation to 6 feet will be necessary. Soil constituent content after excavation is depicted in Table 2.2. Figure 3.2 depicts points showing "representative base sample location" and "representative wall sample location". In looking at the suggested wall sample locations, it appears that while the perimeter of the overall OSA area would get adequate sample coverage to verify reaching/satisfactorily approaching desired soil cleanup values, I am not so sure about the interior of the OSA zone. Shouldn't there be some verification sampling to go along with the inner walls of the eight zones for which soil borings were performed? This would seem especially important for the zones for which contaminant soil levels were quite high - zones S-1 and S-2 - and also for the zones where excavation is projected to be needed to go to the 6' depth level - in this case zones S-1 and S-5.

I look forward to discussing these comments with you and IL EPA, and to your response.

Russ Hart

ILLINOIS ENVIRONMENTAL PROTECTION AGENCY

1021 NORTH GRAND AVENUE EAST, P.O. BOX 19276, SPRINGFIELD, ILLINOIS 62794-9276, 217-782-3397
JAMES R. THOMPSON CENTER, 100 WEST RANDOLPH, SUITE 11-300, CHICAGO, IL 60601, 312-814-6026

ROD R. BLAGOJEVICH, GOVERNOR RENEE CIPRIANO, DIRECTOR

RECEIVED

MAY 31 2005

815-223-1714

May 13, 2005

7002 2030 0001 1873 9122

Mr. Russ Hart Remedial Project Manager SR-6J
United States Environmental Protection Agency
Region V
77 W. Jackson Blvd.
Chicago, Illinois 60604-3590

Refer to: 2010300074—Winnebago County
Southeast Rock Groundwater Contamination Site
Superfund/Technical Reports

Dear Mr. Hart

The Illinois Environmental Protection Agency (Illinois EPA) has reviewed the document entitled Outside Storage Area Source Material Mass Reduction Work Plan (Report) dated April 27, 2005. SECOR International Incorporated of Lombard prepared the Report on the behalf of United Technologies Hamilton Sundstrand (UTC/HS). The work plan was prepared in as part of the requirements of the Administrative Order on Consent (AOC) between the US.EPA and UTC/HS dated January 13, 2003. Illinois EPA approves of the Report/Work Plan using excavation to reduce the source material below the former OSA unit. UTC/HS should address the comments below to the Report and incorporate the appropriate changes the Remedial Design Work Plan.

1. Illinois EPA is recommending that UTC/HS take necessary precautions as best that can be expected on groundwater monitoring wells to prevent unauthorized entry.

2. The use of Illinois Administration Code 35 IAC Part 742 in reference to remediation objectives is inappropriate. The Tiered Approach to Corrective Objectives Part 742 is not an ARAR for the Southeast Rockford Groundwater Contamination Site (SERGC). The applicable ARAR for this situation is 35 Ill. Adm. Code Part 620.410, therefore, any references of use of 35 Ill. Adm. Code Part 742 is as a screening tool only. All remediation objectives for the site including Source Area 9/10 are stated in the ROD for the SERGC signed in 2002.

3. In addition to Ill. Adm. Code Part 620, UTC/HS needs to comply with the ARAR, Ill. Adm. Code Part 724 in use of Remediation Objectives and final closure requirements for the former OSA unit. This is specifically directed to UTC/HS in a letter dated October 15, 2002 with specific requirements listed in Attachment A of the letter. The submitted work plan to remove source material will definitely assist in achieving the post closure requirements, however, it will not complete them pursuant to Ill. Adm. Code Part 724 Subparts F (Releases from Solid Waste Management Units) and G Post (Closure and Post-Closure) requirements.

4. Future work plan submittals need to make note of specific requirements of comments 2 and 3 and how these specific ARARS and outstanding RCRA issues will be met.

5. Use of Ill. Adm. Code Part 742.225(c) that states, continuous interval soil samples were averaged at each boring location. Illinois EPA realizes that this was done in an effort to help facilitate mass reduction of hazardous materials through excavation. This assumption However, to average soil samples with VOC's exceeding the soil saturation limits indicates that the soil may exceed Ill. Adm. Code 721.123, therefore, averaging soil sample results may not be appropriate pursuant to CERCLA and the NCP as opposed to comparison of discrete sample results for analysis.

6. After the excavation is completed remaining levels in soil of metals and VOCs shall be compared to Remediation Objectives in the ROD for review. The potential effectiveness of the proposed RA work is premature at this point until Illinois EPA and U.S. EPA have evaluated a submitted design.

7. The proposed procedure to enhance natural attenuation may require UTC/HS to expand the parameters of the groundwater sampling to determine if anaerobic conditions are being created. Groundwater monitoring wells will need to be placed in such a manner as to verify the effectiveness of this procedure for long and short-term evaluation. Illinois EPA does have the intention of installing down-gradient groundwater monitoring wells as part of monitoring natural attenuation and monitoring the effectiveness of all RA work in Area 9/10.

8. Copies of well abandonment reports should also be forwarded to Illinois EPA as well as the other appropriate State Agencies.

9. Waste disposal needs to meet the requirements set forth in the ROD as well as meeting Federal and State of Illinois requirements. Illinois EPA NPL unit and U.S.EPA should receive copies of waste disposal manifests and other appropriate documentation.

10. A corrected copy of this work plan will be required for placement into the repositories that in particular addresses comments 2 and 3.

11. If UTC/HS is going to rely on sample collection in the excavated area as verification of removal, other potential sampling may be necessary to verify what contaminant concentrations actually. During the excavation process UTC/HS will need to perform air monitoring to minimize exposure risk form inhalation of VOCs.

12. The placement of a clay cap of three feet is satisfactory for short-term acceptance, however, if contaminants of concern (COCs) are to be left in place. This cap and the materials from which it is constructed may need to be reevaluated for the long-term remedy. Metals left behind that exceed Remediation Objectives (RO's) in the ROD may require a cap that will stop infiltration of precipitation sufficiently to meet the requirements of Ill. Adm. Code Part 620.

13. If COC's that exceed RO's are to remain in place, institutional controls will be necessary.

Please provide the Illinois EPA with 3 copies of any future information submitted regarding the above referenced site. Mail two copies to the Springfield Illinois address and another copy to Thomas C. Williams LPG Illinois EPA Project Manager at PO. Box 1515 LaSalle, Illinois 61301-3515. The Illinois EPA requests 14 days notification of all site investigations and remedial activities to coordinate oversight. If you have any questions, please fell free to contact me at the telephone number 815-223-1714 or Terry Ayers at 217-524-3300.

Sincerely,

Thomas C. Williams LPG.
National Priorities List Unit
Federal Sites Remediation Section
Division of Remediation Management
Bureau of Land

cc: Bureau of Land File
Terry Ayers
Paul Jagiello DLC Des Plaines Regional Office
Virginia Forrer

APPENDIX B

OSA Soil Investigation Analytical Results
October 2003 Summary Tables

Appendix B
SOIL ANALYTICAL RESULTS – OUTSIDE CONTAINER STORAGE AREA (OSA)
(S1-S8) – VOCs, DRO/JP-4, and RCRA METALS
AREA 9/10
SER GROUNDWATER CONTAMINATION SUPERFUND SITE
ROCKFORD, IL
S1

Analyte	ROD - Preliminary Remediation Goals and/or Section 742.Table A: Tier 1 Soil Remediation Objectives for Residential Properties: Soil Ingestion (ug/kg)	Soil Inhalation (ug/kg)	Soil Component of Groundwater Class 1 (ug/kg)	ADL (ug/kg)	Location / Depth / Sample Date / Units: RES	Q	SB-S1 2-4' 10/28/2003 ug/kg		SB-S1 4-6' 10/28/2003 ug/kg		SB-S1 6-8' 10/28/2003 ug/kg		SB-S1 8-10' 10/28/2003 ug/kg		SB-S1 10-12' 10/28/2003 ug/kg		SB-S1 12-14' 10/28/2003 ug/kg		SB-S1 14-16' 10/28/2003 ug/kg		SB-S1 16-18' 10/28/2003 ug/kg		SB-S1 18-20' 10/28/2003 ug/kg		SB-S1 20-22' 10/28/2003 ug/kg		SB-S1 22-24' 10/28/2003 ug/kg		SB-S1 24-26' 10/28/2003 ug/kg		SB-S1 26-28' 10/28/2003 ug/kg		SB-S1 28-30' 10/28/2003 ug/kg		SB-S1 30-32' 10/28/2003 ug/kg		SB-S1 32-34' 10/28/2003 ug/kg	
1,1,1-Trichloroethane	NL	1,200,000	2,000	**			220,000	H	140,000		760		83		31		57		65		83		120		410		13		82		11		23		17		8.5	
1,1,2,2-Tetrachloroethane	NL	NL	NL	NL			440	U	410	U	90	U	5.1	U	5.1	U	4.7	U	4.8	U	9.4	U	7.2	U	5.1	U	5.6	U	4.9	U	5.3	U	5.3	U	5.2	U	5.4	U
1,1,2-Trichloroethane	310,000	1,800,000	20	**			440	U	410	U	90	U	5.1	U	5.1	U	4.7	U	4.8	U	9.4	U	7.2	U	5.1	U	5.6	U	4.9	U	5.3	U	5.3	U	5.2	U	5.4	U
1,1-Dichloroethane	7,800,000	1,300,000	23,000	**			7,600		11,000		230		5.1	U	4	Ja	11		8.2		7.2	Ja	17		120		5.6	U	15		5.3	U	5.3	U	5.2	U	5.4	U
1,1-Dichloroethene	700,000	1,500,000	60	**			440	U	560		90	U	5.1	U	5.1	U	4.7	U	4.8	U	9.4	U	7.2	U	5.1	U	5.6	U	4.9	U	5.3	U	5.3	U	5.2	U	5.4	U
1,2-Dichloroethane	7,000	400	20	**			440	U	410	U	90	U	5.1	U	5.1	U	4.7	U	4.8	U	9.4	U	7.2	U	5.1	U	5.6	U	7.2		5.3	U	5.3	U	5.2	U	5.4	U
1,2-Dichloroethene (total)	NL	NL	NL	NL			12,000		9,400		280		19		6.1		14		12		11		24		130		5.6	U	22		5.3	U	4.5	Ja	3.5	Ja	5.4	U
1,2-Dichloropropane	9,000	15,000	30	**			440	U	410	U	90	U	5.1	U	5.1	U	4.7	U	4.8	U	9.4	U	7.2	U	5.1	U	5.6	U	4.9	U	5.3	U	5.3	U	5.2	U	5.4	U
2-Butanone (MEK)	NL	NL	NL	NL			440	U	410	U	90	U	5.1	U	5.1	U	4.7	U	4.8	U	9.4	U	7.2	U	5.1	U	5.6	U	4.9	U	5.3	U	5.3	U	5.2	U	5.4	U
2-Hexanone	NL	NL	NL	NL			440	U	410	U	90	U	5.1	U	5.1	U	32		4.8	U	9.4	U	7.2	U	5.1	U	5.6	U	4.9	U	5.3	U	5.3	U	5.2	U	5.4	U
4-Methyl-2-pentanone (MIBK)	NL	NL	NL	NL			440	U	410	U	90	U	5.1	U	5.1	U	4.7	U	4.8	U	9.4	U	7.2	U	5.1	U	5.6	U	4.9	U	5.3	U	5.3	U	5.2	U	5.4	U
Acetone	7,800,000	100,000,000	16,000	**			440	U	410	U	90	U	5.1	U	5.1	U	18		4.8	U	13		10	M	5.1	U	5.6	U	9.2		6.8	M	5.3	U	18		12	
Benzene	12,000	800	30	**			110	U	100	U	22	U	5.1	U	5.1	U	4.7	U	4.8	U	9.4	U	7.2	U	4.7	Ja	5.6	U	4.9	U	5.3	U	5.3	U	2.6	Ja	5.4	U
Bromodichloromethane	10,000	3,000,000	600	**			440	U	410	U	90	U	5.1	U	5.1	U	4.7	U	4.8	U	9.4	U	7.2	U	21		5.6	U	4.9	U	5.3	U	5.3	U	5.2	U	5.4	U
Bromoform	81,000	53,000	800	**			440	U	410	U	90	U	5.1	U	5.1	U	4.7	U	4.8	U	9.4	U	7.2	U	5.1	U	5.6	U	4.9	U	5.3	U	5.3	U	5.2	U	5.4	U
Bromomethane	110,000	10,000	200	**			440	U	410	U	90	U	5.1	U	5.1	U	4.7	U	4.8	U	9.4	U	7.2	U	5.1	U	5.6	U	4.9	U	5.3	U	5.3	U	5.2	U	5.4	U
Carbon disulfide	7,800,000	720,000	32,000	**			440	U	410	U	90	U	5.1	U	5.1	U	4.7	U	4.8	U	9.4	U	7.2	U	5.1	U	5.6	U	4.9	U	5.3	U	5.3	U	5.2	U	5.4	U
Carbon tetrachloride	5,000	300	70	**			440	U	410	U	90	U	5.1	U	5.1	U	4.7	U	4.8	U	9.4	U	7.2	U	5.1	U	5.6	U	4.9	U	5.3	U	5.3	U	5.2	U	5.4	U
Chlorobenzene	1,600,000	130,000	1,000	**			440	U	410	U	90	U	5.1	U	5.1	U	4.7	U	4.8	U	9.4	U	7.2	U	5.1	U	5.6	U	4.9	U	5.3	U	5.3	U	5.2	U	5.4	U
Chloroethane	NL	NL	NL	NL			440	U	410	U	90	U	5.1	U	5.1	U	4.7	U	4.8	U	9.4	U	7.2	U	5.1	U	5.6	U	4.9	U	5.3	U	5.3	U	5.2	U	5.4	U
Chloroform	100,000	300	600	**			440	U	410	U	90	U	5.1	U	5.1	U	4.7	U	4.8	U	9.4	U	7.2	U	5.1	U	5.6	U	4.9	U	5.3	U	5.3	U	5.2	U	5.4	U
Chloromethane	NL	NL	NL	NL			440	U	410	U	90	U	5.1	U	5.1	U	4.7	U	4.8	U	9.4	U	7.2	U	5.1	U	5.6	U	4.9	U	5.3	U	5.3	U	5.2	U	5.4	U
cis-1,3-Dichloropropene	NL	NL	NL	NL			440	U	410	U	90	U	5.1	U	5.1	U	4.7	U	4.8	U	9.4	U	7.2	U	5.1	U	5.6	U	4.9	U	5.3	U	5.3	U	5.2	U	5.4	U
Ethylbenzene	7,800,000	400,000	13,000	**			110	U	100	U	22	U	5.1	U	5.1	U	4.7	U	4.8	U	9.4	U	7.2	U	3.1	Ja	5.6	U	4.9	U	5.3	U	5.3	U	5.2	U	2.8	Ja
Methylene chloride	85,000	13,000	20	**			440	U	410	U	90	U	5.1	U	5.1	U	4.7	U	4.8	U	6.8	Ja	14		5.1	U	5.9		17		6.6		5.3	U	5.2	U	5.4	U
Styrene	16,000,000	1,500,000	4,000	**			440	U	410	U	90	U	5.1	U	5.1	U	4.7	U	4.8	U	9.4	U	7.2	U	5.1	U	5.6	U	4.9	U	5.3	U	5.3	U	5.2	U	5.4	U
Tetrachloroethene	12,000	11,000	60	**			360,000		150,000		2,200		520		62		73		110		180		220		660		38		130		32		46		35		23	
Toluene	16,000,000	650,000	12,000	**			1,700		2,300		22	U	5.1	U	5.1	U	6.4	M	4.8	U	9.4	U	7.2	U	9.6		5.6	U	4.9	U	5.3	U	5.3	U	6.8		7	H
trans-1,3-Dichloropropene	NL	NL	NL	NL			440	U	410	U	90	U	5.1	U	5.1	U	4.7	U	4.8	U	9.4	U	7.2	U	5.1	U	5.6	U	4.9	U	5.3	U	5.3	U	5.2	U	5.4	U
Trichloroethene	58,000	5,000	60	**			18,000		10,000		90	U	4.5	Ja	3.3	Ja	5.4		6.3		8.1	Ja	12		27		5.6	U	9.8		5.3	U	5.3	U	5.2	U	5.4	U
Vinyl chloride	460	280	10	**			440	U	410	U	90	U	5.1	U	5.1	U	4.7	U	4.8	U	9.4	U	7.2	U	5.1	U	5.6	U	4.9	U	5.3	U	5.3	U	5.2	U	5.4	U
Xylenes (total)	160,000,000	320,000	150,000	**			330	U	310	U	67	U	5.1	U	5.1	U	3.3	Ja	4.8	U	9.4	U	7.2	U	3.9	Ja	5.6	U	4.9	U	5.3	U	5.3	U	3.1	Ja	7.4	
DRO/JP-4							89,000	U	89,000	U	4,800	U	4,700	U	4,300	U	4,200	U	4,200	U	4,300	U	4,200	U	4,800	U	4,300	U	4,300	U	4,300	U	4,200	U	4,300	U	4,200	U
			ug/L				ug/L		ug/L		ug/L		ug/L		ug/L		ug/L		ug/L		ug/L		ug/L		ug/L		ug/L		ug/L		ug/L		ug/L		ug/L		ug/L	
Arsenic,TCLP			50				50	U	50	U	50	U	50	U	50	U	50	U	50	U	50	U	50	U	50	U	50	U	50	U	50	U	50	U	50	U	50	U
Barium,TCLP			2,000				390	B	390		780	B	500	B	280	B	480	B	360	B	430	B	430	B	500	B	370	B	420	B	350	B	390	B	320	B	320	B
Cadmium,TCLP			5				5	U	5	U	5	U	5	U	5	U	5	U	5	U	5	U	5	U	5	U	5	U	5	U	5	U	5	U	5	U	5	U
Chromium,TCLP			100				50	U	50	U	50	U	50	U	50	U	50	U	50	U	50	U	50	U	50	U	50	U	50	U	50	U	50	U	50	U	50	U
Lead,TCLP			7.5				9.2		7.5	U	7.5	U	7.5	U	7.5	U	7.5	U	7.5	U	7.5	U	7.5	U	7.5	U	7.5	U	7.5	U	7.5	U	7.5	U	7.5	U	7.5	U
Mercury,TCLP			2				2	U	2	U	2	U	2	U	2	U	2	U	2	U	2	U	2	U	2	U	2	U	2	U	2	U	2	U	2	U	2	U
Selenium,TCLP			50				50	U	50	U	50	U	50	U	50	U	50	U	50	U	50	U	50	U	50	U	50	U	50	U	50	U	50	U	50	U	50	U
Silver,TCLP			50				50	U	50	U	50	U	50	U	50	U	50	U	50	U	50	U	50	U	50	U	50	U	50	U	50	U	50	U	50	U	50	U

See endnotes for analytical qualifier explanation.

Appendix B
SOIL ANALYTICAL RESULTS – OUTSIDE CONTAINER STORAGE AREA (OSA)
(S1-S8) – VOCs, DRO/JP-4, and RCRA METALS
AREA 9/10
SER GROUNDWATER CONTAMINATION SUPERFUND SITE
ROCKFORD, IL
S2

Analyte	ROD - Preliminary Remedation Goals and/or Section 742.Table A: Tier 1 Soil Remediation Objectives for Residential Properties: Soil Ingestion (ug/kg)	Soil Inhalation (ug/kg)	Soil Component of Groundwater Class 1 (ug/kg)	ADL (ug/kg)	Units RES	Q	Location	SB-S2		SB-S2		SB-S2		SB-S2		SB-S2		SB-S2		SB-S2		SB-S2		SB-S2		SB-S2		SB-S2		SB-S2		SB-S2		SB-S2		SB-S2	
							Depth	2-4'		4-6'		6-8'		8-10'		10-12'		12-14'		14-16'		16-18'		18-20'		20-22'		22-24'		24-26'		26-28'		28-30'		30-32'	
							Sample Date	10/28/2003		10/28/2003		10/28/2003		10/28/2003		10/28/2003		10/28/2003		10/28/2003		10/28/2003		10/28/2003		10/28/2003		10/28/2003		10/28/2003		10/28/2003		10/28/2003		10/28/2003	
								ug/kg		ug/kg		ug/kg		ug/kg		ug/kg		ug/kg		ug/kg		ug/kg		ug/kg		ug/kg		ug/kg		ug/kg		ug/kg		ug/kg		ug/kg	
1,1,1-Trichloroethane	NL	1,200,000	2,000	**				240,000		370		43		23	M	17		58		39		38	H	540		330		23	H	13		9.2		22		15	
1,1,2,2-Tetrachloroethane	NL	NL	NL	NL				170	U	94	U	4.7	U	4.8	U	4.6	U	4.8	U	4.9	U	7.6	U	90	U	100	U	5.1	U	5.1	U	5.1	U	5.2	U	4.9	U
1,1,2-Trichloroethane	310,000	1,800,000	20	**				170	U	94	U	4.7	U	4.8	U	4.6	U	4.8	U	4.9	U	7.6	U	90	U	100	U	5.1	U	5.1	U	5.1	U	5.2	U	4.9	U
1,1-Dichloroethane	7,800,000	1,300,000	23,000	**				8,100		94	U	6.8		3	Ja	4.6	U	9.7	H	5.8		7.6	U	110		100	U	2.7	Ja	5.1	U	5.1	U	5.2	U	4.9	U
1,1-Dichloroethene	700,000	1,500,000	60	**				1,300		94	U	4.7	U	4.8	U	4.6	U	4.8	U	4.9	U	7.6	U	90	U	100	U	5.1	U	5.1	U	5.1	U	5.2	U	4.9	U
1,2-Dichloroethane	7,000	400	20	**				170	U	94	U	4.7	U	4.8	U	4.6	U	4.8	U	4.9	U	7.6	U	90	U	100	U	5.1	U	5.1	U	5.1	U	5.2	U	4.9	U
1,2-Dichloroethene (total)	NL	NL	NL	NL				7,200		280		30		13		11		26		16		10		320		210		8.1		5.1	U	5.1	U	5.8		4.9	U
1,2-Dichloropropane	9,000	15,000	30	**				170	U	94	U	4.7	U	4.8	U	4.6	U	4.8	U	4.9	U	7.6	U	90	U	100	U	5.1	U	5.1	U	5.1	U	5.2	U	4.9	U
2-Butanone (MEK)	NL	NL	NL	NL				170	U	94	U	4.7	U	4.8	U	4.6	U	4.8	U	4.9	U	7.6	U	90	U	100	U	5.1	U	5.1	U	8.1		5.2	U	4.9	U
2-Hexanone	NL	NL	NL	NL				170	U	94	U	4.7	U	4.8	U	4.6	U	4.8	U	4.9	U	7.6	U	90	U	100	U	5.1	U	5.1	U	5.1	U	5.2	U	4.9	U
4-Methyl-2-pentanone (MIBK)	NL	NL	NL	NL				170	U	94	U	4.7	U	4.8	U	4.6	U	4.8	U	4.9	U	7.6	U	90	U	100	U	5.1	U	5.1	U	5.1	U	5.2	U	4.9	U
Acetone	7,800,000	100,000,000	16,000	**				170	U	94	U	14		4.8	U	50		4.8	U	4.9	U	7.6	U	90	U	100	U	5.1	U	5.1	U	48		5.2	U	11	
Benzene	12,000	800	30	**				42	U	23	U	4.7	U	4.8	U	4.6	U	4.8	U	4.9	U	7.6	U	22	U	25	U	5.1	U	5.1	U	5.1	U	5.2	U	4.9	U
Bromodichloromethane	10,000	3,000,000	600	**				170	U	94	U	4.7	U	4.8	U	4.6	U	4.8	U	4.9	U	7.6	U	90	U	100	U	5.1	U	5.1	U	5.1	U	5.2	U	4.9	U
Bromoform	81,000	53,000	800	**				170	U	94	U	4.7	U	4.8	U	4.6	U	4.8	U	4.9	U	7.6	U	90	U	100	U	5.1	U	5.1	U	5.1	U	5.2	U	4.9	U
Bromomethane	110,000	10,000	200	**				170	U	94	U	4.7	U	4.8	U	4.6	U	4.8	U	4.9	U	7.6	U	90	U	100	U	5.1	U	5.1	U	5.1	U	5.2	U	4.9	U
Carbon disulfide	7,800,000	720,000	32,000	**				170	U	94	U	4.7	U	4.8	U	4.6	U	4.8	U	4.9	U	7.6	U	90	U	100	U	5.1	U	5.1	U	5.1	U	5.2	U	4.9	U
Carbon tetrachloride	5,000	300	70	**				170	U	94	U	4.7	U	4.8	U	4.6	U	4.8	U	4.9	U	7.6	U	90	U	100	U	5.1	U	5.1	U	5.1	U	5.2	U	4.9	U
Chlorobenzene	1,600,000	130,000	1,000	**				170	U	94	U	4.7	U	4.8	U	4.6	U	4.8	U	4.9	U	7.6	U	90	U	100	U	5.1	U	5.1	U	5.1	U	5.2	U	4.9	U
Chloroethane	NL	NL	NL	NL				170	U	94	U	4.7	U	4.8	U	4.6	U	4.8	U	4.9	U	7.6	U	90	U	100	U	5.1	U	5.1	U	5.1	U	5.2	U	4.9	U
Chloroform	100,000	300	600	**				170	U	94	U	4.7	U	4.8	U	4.6	U	4.8	U	4.9	U	7.6	U	90	U	100	U	5.1	U	5.1	U	5.1	U	5.2	U	4.9	U
Chloromethane	NL	NL	NL	NL				170	U	94	U	4.7	U	4.8	U	4.6	U	4.8	U	4.9	U	7.6	U	90	U	100	U	5.1	U	5.1	U	5.1	U	5.2	U	4.9	U
cis-1,3-Dichloropropene	NL	NL	NL	NL				170	U	94	U	4.7	U	4.8	U	4.6	U	4.8	U	4.9	U	7.6	U	90	U	100	U	5.1	U	5.1	U	5.1	U	5.2	U	4.9	U
Ethylbenzene	7,800,000	400,000	13,000	**				42	U	23	U	4.7	U	4.8	U	4.6	U	4.8	U	4.9	U	7.6	U	22	U	25	U	5.1	U	5.1	U	5.1	U	5.2	U	4.9	U
Methylene chloride	85,000	13,000	20	**				170	U	94	U	12		4.8	U	4.6	U	4.8	U	4.9	U	11		90	U	100	U	9.8		5.1	U	5.1	U	5.2	U	4.9	U
Styrene	16,000,000	1,500,000	4,000	**				170	U	94	U	4.7	U	4.8	U	4.6	U	4.8	U	4.9	U	7.6	U	90	U	100	U	5.1	U	5.1	U	5.1	U	5.2	U	4.9	U
Tetrachloroethene	12,000	11,000	60	**				320,000		1,100		120		120		87		150		140		190		1,800		890		98		55		40		74		48	
Toluene	16,000,000	650,000	12,000	**				540		23	U	4.7	U	4.8	U	9.6		4.8	U	4.9	U	7.6	U	22	U	25	U	5.1	U	5.1	U	11		5.2	U	6.2	
trans-1,3-Dichloropropene	NL	NL	NL	NL				170	U	94	U	4.7	U	4.8	U	4.6	U	4.8	U	4.9	U	7.6	U	90	U	100	U	5.1	U	5.1	U	5.1	U	5.2	U	4.9	U
Trichloroethene	58,000	5,000	60	**				20,000		110		11		7		4.9		13		9.8		8.7		140		100	U	5.4		5.1	U	5.1	U	5.2	U	4.9	U
Vinyl chloride	460	280	10	**				170	U	94	U	4.7	U	4.8	U	4.6	U	4.8	U	4.9	U	7.6	U	90	U	100	U	5.1	U	5.1	U	5.1	U	5.2	U	4.9	U
Xylenes (total)	160,000,000	320,000	150,000	**				130	U	70	U	4.7	U	4.8	U	4.6	U	4.8	U	4.9	U	7.6	U	67	U	75	U	5.1	U	5.1	U	5.1	U	5.2	U	4.9	U
DRO/JP-4								4,900	U	4,700	U	4,500	U	4,400	U	4,300	U	4,200	U	4,300	U	4,400	U	4,800	U	5,100	U	4,300	U	4,200	U	4,200	U	4,300	U	4,200	U
			ug/L					ug/L		ug/L		ug/L		ug/L		ug/L		ug/L		ug/L		ug/L		ug/L		ug/L		ug/L		ug/L		ug/L		ug/L		ug/L	
Arsenic,TCLP			50					11	B	50	U	50	U	50	U	50	U	50	U	50	U	50	U	50	U	50	U	50	U	50	U	50	U	50	U	50	U
Barium,TCLP			2,000					320		320		660	B	200	B	360	B	380	B	370	B	400	B	410	B	470	B	400	B	370	B	350	B	300	B	300	B
Cadmium,TCLP			5					5	U	5	U	5	U	5	U	5	U	5	U	5	U	5	U	12		4	B	5	U	5	U	5	U	5	U	5	U
Chromium,TCLP			100					50	U	50	U	50	U	50	U	50	U	50	U	50	U	50	U	50	U	50	U	50	U	50	U	50	U	50	U	50	U
Lead,TCLP			7.5					7.5	U	7.5	U	7.5	U	7.5	U	7.5	U	7.5	U	7.5	U	7.5	U	7.5	U	7.5	U	7.5	U	7.5	U	7.5	U	7.5	U	7.5	U
Mercury,TCLP			2					2	U	2	U	2	U	2	U	2	U	2	U	2	U	2	U	2	U	2	U	2	U	2	U	2	U	2	U	2	U
Selenium,TCLP			50					50	U	50	U	50	U	50	U	50	U	50	U	50	U	50	U	50	U	50	U	50	U	50	U	50	U	50	U	50	U
Silver,TCLP			50					50	U	50	U	50	U	50	U	50	U	50	U	50	U	50	U	50	U	50	U	50	U	50	U	50	U	50	U	50	U

See endnotes for analytical qualifier explanation.

Appendix B
SOIL ANALYTICAL RESULTS – OUTSIDE CONTAINER STORAGE AREA (OSA)
(S1-S8) – VOCs, DRO/JP-4, and RCRA METALS
AREA 9/10
SER GROUNDWATER CONTAMINATION SUPERFUND SITE
ROCKFORD, IL
S3

Analyte	ROD - Preliminary Remedation Goals and/or Section 742.Table A: Tier 1 Soil Remediation Objectives for Residential Properties: Soil Ingestion (ug/kg)	Soil Inhalation (ug/kg)	Soil Component of Groundwater Class 1 (ug/kg)	ADL (ug/kg)	Units RES	Q	Location	SB-S3		SB-S3		SB-S3		SB-S3		SB-S3		SB-S3		SB-S3		SB-S3		SB-S3		SB-S3		SB-S3		SB-S3		SBD-S3		SB-S3		SB-S3		SB-S3	
							Depth	0-2'		2-4'		4-6'		6-8'		8-10'		10-12'		12-14'		14-16'		16-18'		18-20'		20-22'		22-24'		24-26'		24-26'		26-28'		28-30'		30-32'	
							Sample Date	10/28/2003		10/28/2003		10/28/2003		10/28/2003		10/28/2003		10/28/2003		10/28/2003		10/28/2003		10/28/2003		10/28/2003		10/28/2003		10/28/2003		10/28/2003		10/28/2003		10/28/2003		10/28/2003		10/28/2003	
					Units			ug/kg		ug/kg		ug/kg		ug/kg		ug/kg		ug/kg		ug/kg		ug/kg		ug/kg		ug/kg		ug/kg		ug/kg		ug/kg		ug/kg		ug/kg		ug/kg		ug/kg	
1,1,1-Trichloroethane	NL	1,200,000	2,000	**				680		4,800		170		8.1	H	12	H	55		58		29	H	42		480		110		8.6	H	12	H	8.8	M	9.6	H	9.7	H	19	M
1,1,2,2-Tetrachloroethane	NL	NL	NL	NL				81	U	120	U	4.4	U	4.9	U	5	U	4.7	U	4.9	U	5.3	U	4.9	U	91	U	5	U	5.3	U	5.3	U	5.3	U	4.9	U	4.5	U	5.1	U
1,1,2-Trichloroethane	310,000	1,800,000	20	**				81	U	120	U	4.4	U	4.9	U	5	U	4.7	U	4.9	U	5.3	U	4.9	U	91	U	5	U	5.3	U	5.3	U	5.3	U	4.9	U	4.5	U	5.1	U
1,1-Dichloroethane	7,800,000	1,300,000	23,000	**				100		1,300		58		4.9	U	5	U	10	M	8.2		5.3	U	3.7	Ja	120		36		5.3	U	5.3	U	5.3	U	4.9	U	4.5	U	5.1	U
1,1-Dichloroethene	700,000	1,500,000	60	**				81	U	120	U	4.4	U	4.9	U	5	U	4.7	U	4.9	U	5.3	U	4.9	U	91	U	5	U	5.3	U	5.3	U	5.3	U	4.9	U	4.5	U	5.1	U
1,2-Dichloroethane	7,000	400	20	**				81	U	120	U	4.4	U	4.9	U	5	U	4.7	U	4.9	U	5.3	U	4.9	U	91	U	5	U	5.3	U	5.3	U	5.3	U	4.9	U	4.5	U	5.1	U
1,2-Dichloroethene (total)	NL	NL	NL	NL				81	U	750		40		4.9	U	5	U	9.2		8.6		2.7	Ja	4	Ja	110		27		5.3	U	5.3	U	5.3	U	4.9	U	4.5	U	5.1	U
1,2-Dichloropropane	9,000	15,000	30	**				81	U	120	U	4.4	U	4.9	U	5	U	4.7	U	4.9	U	5.3	U	4.9	U	91	U	5	U	5.3	U	5.3	U	5.3	U	4.9	U	4.5	U	5.1	U
2-Butanone (MEK)	NL	NL	NL	NL				81	U	120	U	4.4	U	4.9	U	5	U	4.7	U	4.9	U	5.3	U	4.9	U	91	U	5	U	5.4		5.3	U	5.3	U	4.9	U	4.5	U	5.1	U
2-Hexanone	NL	NL	NL	NL				81	U	120	U	4.4	U	4.9	U	5	U	4.7	U	4.9	U	5.3	U	4.9	U	91	U	5	U	5.3	U	5.3	U	5.3	U	4.9	U	4.5	U	5.1	U
4-Methyl-2-pentanone (MIBK)	NL	NL	NL	NL				81	U	120	U	4.4	U	4.9	U	5	U	4.7	U	4.9	U	5.3	U	4.9	U	91	U	5	U	5.3	U	5.3	U	5.3	U	4.9	U	4.5	U	5.1	U
Acetone	7,800,000	100,000,000	16,000	**				81	U	120	U	4.4	U	4.9	U	5	U	4.7	U	4.9	U	5.3	U	4.9	U	91	U	5	U	5.3	U	5.8		5.3	U	4.9	U	4.5	U	5.1	U
Benzene	12,000	800	30	**				20	U	30	U	4.4	U	4.9	U	5	U	4.7	U	4.9	U	5.3	U	4.9	U	23	U	4	Ja	5.3	U	5.3	U	5.3	U	4.9	U	4.5	U	5.1	U
Bromodichloromethane	10,000	3,000,000	600	**				81	U	120	U	4.4	U	4.9	U	5	U	4.7	U	4.9	U	5.3	U	4.9	U	91	U	5	U	5.3	U	5.3	U	5.3	U	4.9	U	4.5	U	5.1	U
Bromoform	81,000	53,000	800	**				81	U	120	U	4.4	U	4.9	U	5	U	4.7	U	4.9	U	5.3	U	4.9	U	91	U	5	U	5.3	U	5.3	U	5.3	U	4.9	U	4.5	U	5.1	U
Bromomethane	110,000	10,000	200	**				81	U	120	U	4.4	U	4.9	U	5	U	4.7	U	4.9	U	5.3	U	4.9	U	91	U	5	U	5.3	U	5.3	U	5.3	U	4.9	U	4.5	U	5.1	U
Carbon disulfide	7,800,000	720,000	32,000	**				81	U	120	U	4.4	U	4.9	U	5	U	4.7	U	4.9	U	5.3	U	4.9	U	91	U	5	U	5.3	U	5.3	U	5.3	U	4.9	U	4.5	U	5.1	U
Carbon tetrachloride	5,000	300	70	**				81	U	120	U	4.4	U	4.9	U	5	U	4.7	U	4.9	U	5.3	U	4.9	U	91	U	5	U	5.3	U	5.3	U	5.3	U	4.9	U	4.5	U	5.1	U
Chlorobenzene	1,600,000	130,000	1,000	**				81	U	120	U	4.4	U	4.9	U	5	U	4.7	U	4.9	U	5.3	U	4.9	U	91	U	5	U	5.3	U	5.3	U	5.3	U	4.9	U	4.5	U	5.1	U
Chloroethane	NL	NL	NL	NL				81	U	120	U	4.4	U	4.9	U	5	U	4.7	U	4.9	U	5.3	U	4.9	U	91	U	5	U	5.3	U	5.3	U	5.3	U	4.9	U	4.5	U	5.1	U
Chloroform	100,000	300	600	**				81	U	120	U	4.4	U	4.9	U	5	U	4.7	U	4.9	U	5.3	U	4.9	U	91	U	5	U	5.3	U	5.3	U	5.3	U	4.9	U	4.5	U	5.1	U
Chloromethane	NL	NL	NL	NL				81	U	120	U	4.4	U	4.9	U	5	U	4.7	U	4.9	U	5.3	U	4.9	U	91	U	5	U	5.3	U	5.3	U	5.3	U	4.9	U	4.5	U	5.1	U
cis-1,3-Dichloropropene	NL	NL	NL	NL				81	U	120	U	4.4	U	4.9	U	5	U	4.7	U	4.9	U	5.3	U	4.9	U	91	U	5	U	5.3	U	5.3	U	5.3	U	4.9	U	4.5	U	5.1	U
Ethylbenzene	7,800,000	400,000	13,000	**				20	U	30	U	4.4	U	4.9	U	5	U	4.7	U	4.9	U	5.3	U	4.9	U	23	U	5	U	5.3	U	5.3	U	5.3	U	4.9	U	4.5	U	5.1	U
Methylene chloride	85,000	13,000	20	**				81	U	120	U	4.4	U	4.9	U	5.4		10		7.7		5.3	U	4.9	U	91	U	5	U	14		6.5		5.3	U	4.9	U	4.5	U	11	
Styrene	16,000,000	1,500,000	4,000	**				81	U	120	U	4.4	U	4.9	U	5	U	4.7	U	4.9	U	5.3	U	4.9	U	91	U	5	U	5.3	U	5.3	U	5.3	U	4.9	U	4.5	U	5.1	U
Tetrachloroethene	12,000	11,000	60	**				2,200		20,000		120		12		22		75		82		61		82		800		96		26		32		25		28		21		49	
Toluene	16,000,000	650,000	12,000	**				20	U	30	U	4.4	U	4.9	U	5	U	4.7	U	4.9	U	5.3	U	4.9	U	23	U	7.8		5.3	U	5.3	U	5.3	U	4.9	U	4.5	U	5.1	U
trans-1,3-Dichloropropene	NL	NL	NL	NL				81	U	120	U	4.4	U	4.9	U	5	U	4.7	U	4.9	U	5.3	U	4.9	U	91	U	5	U	5.3	U	5.3	U	5.3	U	4.9	U	4.5	U	5.1	U
Trichloroethene	58,000	5,000	60	**				81	U	450		9.2		4.9	U	5	U	4	Ja	5		5.3	U	3.8	Ja	91	U	6.2		5.3	U	5.3	U	5.3	U	4.9	U	4.5	U	5.1	U
Vinyl chloride	460	280	10	**				81	U	120	U	4.4	U	4.9	U	5	U	4.7	U	4.9	U	5.3	U	4.9	U	91	U	5	U	5.3	U	5.3	U	5.3	U	4.9	U	4.5	U	5.1	U
Xylenes (total)	160,000,000	320,000	150,000	**				61	U	90	U	4.4	U	4.9	U	5	U	4.7	U	4.9	U	5.3	U	4.9	U	68	U	5	U	5.3	U	5.3	U	5.3	U	4.9	U	4.5	U	5.1	U
DRO/JP-4								4,400	U*	4,900	U*	4,900	U*	4,400	U*	4,400	U*	4,300	U*	4,300	U*	4,200	U*	4,300	U*	4,600	U*	4,800	U*	4,300	U*	4,300	U*	4,300	U*	4,200	U*	4,300	U*	4,200	U*
			ug/L					ug/L		ug/L		ug/L		ug/L		ug/L		ug/L		ug/L		ug/L		ug/L		ug/L		ug/L		ug/L		ug/L		ug/L		ug/L		ug/L		ug/L	
Arsenic,TCLP			50					50	U	50	U	50	U	50	U	50	U	50	U	50	U	50	U	50	U	50	U	50	U	50	U	50	U	50	U	50	U	50	U	50	U
Barium,TCLP			2,000					700	B	740	B	740		590	B	430	B	410	B	420	B	410	B	410	B	430	B	350	B	370	B	390	B	400	B	330	B	400	B	410	B
Cadmium,TCLP			5					10		4	B	5	U	5	U	5	U	5	U	5	U	5	U	5	U	5	U	5	U	5	U	5	U	5	U	5	U	5	U	5	U
Chromium,TCLP			100					50	U	50	U	50	U	50	U	50	U	50	U	50	U	50	U	50	U	50	U	50	U	50	U	50	U	50	U	50	U	50	U	50	U
Lead,TCLP			7.5					7.5	U	7	B	7.5	U	7.5	U	7.5	U	7.5	U	7.5	U	7.5	U	7.5	U	7.5	U	7.5	U	7.5	U	7.5	U	7.5	U	7.5	U	7.5	U	7.5	U
Mercury,TCLP			2					2	U	2	U	2	U	2	U	2	U	2	U	2	U	2	U	2	U	2	U	2	U	2	U	2	U	2	U	2	U	2	U	2	U
Selenium,TCLP			50					50	U	50	U	50	U	50	U	50	U	50	U	50	U	50	U	50	U	50	U	50	U	50	U	50	U	50	U	50	U	50	U	50	U
Silver,TCLP			50					50	U	50	U	50	U	50	U	50	U	50	U	50	U	50	U	50	U	50	U	50	U	50	U	50	U	50	U	50	U	50	U	50	U

See endnotes for analytical qualifier explanation.

Appendix B
SOIL ANALYTICAL RESULTS – OUTSIDE CONTAINER STORAGE AREA (OSA)
(S1-S8) – VOCs, DRO/JP-4, and RCRA METALS
AREA 9/10
SER GROUNDWATER CONTAMINATION SUPERFUND SITE
ROCKFORD, IL
S4

Analyte	ROD - Preliminary Remedation Goals and/or Section 742.Table A: Tier 1 Soil Remediation Objectives for Residential Properties: Soil Ingestion (ug/kg)	Soil Inhalation (ug/kg)	Soil Component of Groundwater Class 1 (ug/kg)	ADL (ug/kg)	Location / Depth / Sample Date / Units: RES	Q	SB-S4 0-2' 10/29/2003 ug/kg		SB-S4 2-4' 10/29/2003 ug/kg		SB-S4 4-6' 10/29/2003 ug/kg		SB-S4 6-8' 10/29/2003 ug/kg		SB-S4 8-10' 10/29/2003 ug/kg		SB-S4 10-12' 10/29/2003 ug/kg		SB-S4 12-14' 10/29/2003 ug/kg		SB-S4 16-18' 10/29/2003 ug/kg		SB-S4 18-20' 10/29/2003 ug/kg		SBD-S4 18-20' 10/29/2003 ug/kg		SB-S4 20-22' 10/29/2003 ug/kg		SB-S4 22-24' 10/29/2003 ug/kg		SB-S4 24-26' 10/29/2003 ug/kg		SB-S4 26-28' 10/29/2003 ug/kg		SB-S4 28-30' 10/29/2003 ug/kg		SB-S4 30-32' 10/29/2003 ug/kg	
1,1,1-Trichloroethane	NL	1,200,000	2,000	**			1,200		1,500		440		130		18		22		45		47		710		600		890		11		7.9		9.4		25		19	
1,1,2,2-Tetrachloroethane	NL	NL	NL	NL			100	U	92	U	9.6	U	4.4	U	5.3	U	5.1	U	5.1	U	5.7	U	100	U	93	U	85	U	5.3	U	5.2	U	4.9	U	5	U	4.5	U
1,1,2-Trichloroethane	310,000	1,800,000	20	**			100	U	92	U	8.3	Ja	4.4	U	5.3	U	5.1	U	5.1	U	5.7	U	100	U	93	U	85	U	5.3	U	5.2	U	4.9	U	5	U	4.5	U
1,1-Dichloroethane	7,800,000	1,300,000	23,000	**			100	U	170		310		32		5.3	U	5.1	U	7.3		5.7	U	130		100		180		5.3	U	5.2	U	4.9	U	5	U	3.4	Ja
1,1-Dichloroethene	700,000	1,500,000	60	**			100	U	92	U	9.6	U	4.4	U	5.3	U	5.1	U	5.1	U	5.7	U	100	U	93	U	85	U	5.3	U	5.2	U	4.9	U	5	U	4.5	U
1,2-Dichloroethane	7,000	400	20	**			100	U	92	U	9.6	U	4.4	U	5.3	U	5.1	U	5.1	U	5.7	U	100	U	93	U	85	U	5.3	U	5.2	U	4.9	U	5	U	4.5	U
1,2-Dichloroethene (total)	NL	NL	NL	NL			300		450		200		78		5.1	Ja	7.1		17		10		310		240		380		3.4	Ja	5.2	U	4.9	U	5.1		6.2	
1,2-Dichloropropane	9,000	15,000	30	**			100	U	92	U	9.6	U	4.4	U	5.3	U	5.1	U	5.1	U	5.7	U	100	U	93	U	85	U	5.3	U	5.2	U	4.9	U	5	U	4.5	U
2-Butanone (MEK)	NL	NL	NL	NL			100	U	92	U	9.6	U	4.4	U	5.3	U	5.1	U	5.1	U	5.7	U	100	U	93	U	85	U	5.3	U	5.2	U	4.9	U	5	U	4.5	U
2-Hexanone	NL	NL	NL	NL			100	U	92	U	9.6	U	4.4	U	5.3	U	5.1	U	5.1	U	5.7	U	100	U	93	U	85	U	5.3	U	5.2	U	4.9	U	5	U	4.5	U
4-Methyl-2-pentanone (MIBK)	NL	NL	NL	NL			100	U	92	U	9.6	U	4.4	U	5.3	U	5.1	U	5.1	U	5.7	U	100	U	93	U	85	U	5.3	U	5.2	U	4.9	U	5	U	4.5	U
Acetone	7,800,000	100,000,000	16,000	**			100	U	92	U	9.6	U	4.4	U	5.3	U	5.1	U	5.1	U	5.7	U	100	U	93	U	85	U	5.3	U	5.2	U	4.9	U	17		4.5	U
Benzene	12,000	800	30	**			25	U	23	U	9.6	U	4.4	U	5.3	U	5.1	U	5.1	U	5.7	U	25	U	23	U	21	U	5.3	U	5.2	U	4.9	U	5	U	4.5	U
Bromodichloromethane	10,000	3,000,000	600	**			100	U	92	U	9.6	U	4.4	U	5.3	U	5.1	U	5.1	U	5.7	U	100	U	9.3	U	85	U	5.3	U	5.2	U	4.9	U	5	U	4.5	U
Bromoform	81,000	53,000	800	**			100	U	92	U	9.6	U	4.4	U	5.3	U	5.1	U	5.1	U	5.7	U	100	U	93	U	85	U	5.3	U	5.2	U	4.9	U	5	U	4.5	U
Bromomethane	110,000	10,000	200	**			100	U	92	U	9.6	U	4.4	U	5.3	U	5.1	U	5.1	U	5.7	U	100	U	93	U	85	U	5.3	U	5.2	U	4.9	U	5	U	4.5	U
Carbon disulfide	7,800,000	720,000	32,000	**			100	U	92	U	9.6	U	4.4	U	5.3	U	5.1	U	5.1	U	5.7	U	100	U	93	U	85	U	5.3	U	5.2	U	4.9	U	5	U	4.5	U
Carbon tetrachloride	5,000	300	70	**			100	U	92	U	9.6	U	4.4	U	5.3	U	5.1	U	5.1	U	5.7	U	100	U	93	U	85	U	5.3	U	5.2	U	4.9	U	5	U	4.5	U
Chlorobenzene	1,600,000	130,000	1,000	**			100	U	92	U	9.6	U	4.4	U	5.3	U	5.1	U	5.1	U	5.7	U	100	U	93	U	85	U	5.3	U	5.2	U	4.9	U	5	U	4.5	U
Chloroethane	NL	NL	NL	NL			100	U	92	U	9.6	U	4.4	U	5.3	U	5.1	U	5.1	U	5.7	U	100	U	93	U	85	U	5.3	U	5.2	U	4.9	U	5	U	4.5	U
Chloroform	100,000	300	600	**			100	U	92	U	9.6	U	4.4	U	5.3	U	5.1	U	5.1	U	5.7	U	100	U	93	U	85	U	5.3	U	5.2	U	4.9	U	5	U	4.5	U
Chloromethane	NL	NL	NL	NL			100	U	92	U	9.6	U	4.4	U	5.3	U	5.1	U	5.1	U	5.7	U	100	U	93	U	85	U	5.3	U	5.2	U	4.9	U	5	U	4.5	U
cis-1,3-Dichloropropene	NL	NL	NL	NL			100	U	92	U	9.6	U	4.4	U	5.3	U	5.1	U	5.1	U	5.7	U	100	U	93	U	85	U	5.3	U	5.2	U	4.9	U	5	U	4.5	U
Ethylbenzene	7,800,000	400,000	13,000	**			25	U	23	U	9.6	U	4.4	U	5.3	U	5.1	U	5.1	U	5.7	U	25	U	23	U	21	U	5.3	U	5.2	U	4.9	U	5	U	4.5	U
Methylene chloride	85,000	13,000	20	**			100	U	92	U	12		11		8.2		5.1	U	9.4		5.7	U	100	U	93	U	85	U	5.3	U	5.2	U	4.9	U	5	U	7.5	
Styrene	16,000,000	1,500,000	4,000	**			100	U	92	U	9.6	U	4.4	U	5.3	U	5.1	U	5.1	U	5.7	U	100	U	93	U	85	U	5.3	U	5.2	U	4.9	U	5	U	4.5	U
Tetrachloroethene	12,000	11,000	60	**			5,100		4,400		580		110		51		46		100		120		1,600		1400		1,400		40		29		35		67		53	
Toluene	16,000,000	650,000	12,000	**			25	U	23	U	9.6	U	4.4	U	5.3	U	5.1	U	5.1	U	5.7	U	25	U	23	U	21	U	5.3	U	5.2	U	4.9	U	6.3		4.5	U
trans-1,3-Dichloropropene	NL	NL	NL	NL			100	U	92	U	9.6	U	4.4	U	5.3	U	5.1	U	5.1	U	5.7	U	100	U	93	U	85	U	5.3	U	5.2	U	4.9	U	5	U	4.5	U
Trichloroethene	58,000	5,000	60	**			300		310		120		13		2.7	Ja	3.1	Ja	6.6		7.1		100		91		110		5.3	U	5.2	U	4.9	U	5	U	3	Ja
Vinyl chloride	460	280	10	**			100	U	92	U	9.6	U	4.4	U	5.3	U	5.1	U	5.1	U	5.7	U	100	U	93	U	85	U	5.3	U	5.2	U	4.9	U	5	U	4.5	U
Xylenes (total)	160,000,000	320,000	150,000	**			75	U	69	U	9.6	U	4.4	U	5.3	U	5.1	U	5.1	U	5.7	U	75	U	70	U	64	U	5.3	U	5.2	U	4.9	U	5	U	4.5	U
DRO/JP-4							4,600	U*	5,100	U*	4,700	U*	4,600	U*	4,300	U*	4,300	U*	4,300	U*	4,300	U*	4,700	U*	4.4	U*	5,200	U*	4,200	U*	4,300	U*	4,200	U*	4,300	U*	4,300	U*
			ug/L				ug/L		ug/L		ug/L		ug/L		ug/L		ug/L		ug/L		ug/L		ug/L		ug/L		ug/L		ug/L		ug/L		ug/L		ug/L		ug/L	
Arsenic,TCLP			50				50	U	50	U	50	U	50	U	50	U	50	U	50	U	50	U	50	U	50	U	50	U	50	U	50	U	50	U	50	U	50	U
Barium,TCLP			2,000				330	B	840	B	790	B	530	B	530	B	120	B	450	B	310	B	350	B	350	B	460	B	360	B	370	B	360	B	380	B	370	B
Cadmium,TCLP			5				7		5	U	5	U	5	U	5	U	5	U	5	U	160		90		140		2	B	5	U	5	U	5	U	5	U	5	U
Chromium,TCLP			100				50	U	50	U	50	U	50	U	50	U	50	U	50	U	50	U	50	U	50	U	50	U	50	U	50	U	50	U	50	U	50	U
Lead,TCLP			7.5				5.5	B	7.5	U	7.5	U	7.5	U	7.5	U	7.5	U	7.5	U	7.5	U	7.5	U	7.5	U	7.5	U	7.5	U	7.5	U	7.5	U	7.5	U	7.5	U
Mercury,TCLP			2				2	U	2	U	2	U	2	U	2	U	2	U	2	U	2	U	2	U	2	U	2	U	2	U	2	U	2	U	2	U	2	U
Selenium,TCLP			50				50	U	50	U	50	U	50	U	50	U	50	U	50	U	50	U	50	U	50	U	50	U	50	U	50	U	50	U	50	U	50	U
Silver,TCLP			50				50	U	50	U	50	U	50	U	50	U	50	U	50	U	50	U	50	U	50	U	50	U	50	U	50	U	50	U	50	U	50	U

See endnotes for analytical qualifier explanation.

Appendix B
SOIL ANALYTICAL RESULTS – OUTSIDE CONTAINER STORAGE AREA (OSA)
(S1-S8) – VOCs, DRO/JP-4, and RCRA METALS
AREA 9/10
SER GROUNDWATER CONTAMINATION SUPERFUND SITE
ROCKFORD, IL
S5

Analyte	ROD - Preliminary Remedation Goals and/or Section 742.Table A: Tier 1 Soil Remediation Objectives for Residential Properties: Soil Ingestion (ug/kg)	Soil Inhalation (ug/kg)	Soil Component of Groundwater Class 1 (ug/kg)	ADL (ug/kg)	Units RES	Q	Location	SB-S5		SB-S5		SB-S5		SB-S5		SB-S5		SB-S5		SB-S5		SB-S5		SB-S5		SB-S5		SB-S5		SB-S5		SB-S5		SB-S5		SB-S5	
							Depth	2-4'		4-6'		6-8'		8-10'		10-12'		12-14'		14-16'		16-18'		18-20'		20-22'		22-24'		24-26'		26-28'		28-30'		30-32'	
							Sample Date	10/29/2003		10/29/2003		10/29/2003		10/29/2003		10/29/2003		10/29/2003		10/29/2003		10/29/2003		10/29/2003		10/29/2003		10/29/2003		10/29/2003		10/29/2003		10/29/2003		10/29/2003	
								ug/kg		ug/kg		ug/kg		ug/kg		ug/kg		ug/kg		ug/kg		ug/kg		ug/kg		ug/kg		ug/kg		ug/kg		ug/kg		ug/kg		ug/kg	
1,1,1-Trichloroethane	NL	1,200,000	2,000	**				230		860		130		18	H	100	U	23	H	22	H	35		250		300		23	H	12	H	21	H	20	H	24	H
1,1,2,2-Tetrachloroethane	NL	NL	NL	NL				90	U	85	U	77	U	5	U	100	U	4.5	U	4.9	U	5.2	U	91	U	5	U	5	U	4.9	U	5	U	4.7	U	4.8	U
1,1,2-Trichloroethane	310,000	1,800,000	20	**				90	U	85	U	77	U	5	U	100	U	4.5	U	4.9	U	5.2	U	91	U	5	U	5	U	4.9	U	5	U	4.7	U	4.8	U
1,1-Dichloroethane	7,800,000	1,300,000	23,000	**				90	U	85	U	77	U	5	U	100	U	4.5	U	4.9	U	5.2	U	91	U	55		3.4	Ja	4.9	U	5.3		3.9	Ja	4.8	U
1,1-Dichloroethene	700,000	1,500,000	60	**				90	U	85	U	77	U	5	U	100	U	4.5	U	4.9	U	5.2	U	91	U	5	U	5	U	4.9	U	5	U	4.7	U	4.8	U
1,2-Dichloroethane	7,000	400	20	**				90	U	85	U	77	U	5	U	100	U	4.5	U	4.9	U	5.2	U	91	U	5	U	5	U	4.9	U	5	U	4.7	U	4.8	U
1,2-Dichloroethene (total)	NL	NL	NL	NL				90	U	97		77	U	4.3	Ja	100	U	7.1		5.6		6.9		110		130		7.5		4.9	U	11		7.9		9.2	
1,2-Dichloropropane	9,000	15,000	30	**				90	U	85	U	77	U	5	U	100	U	4.5	U	4.9	U	5.2	U	91	U	5	U	5	U	4.9	U	5	U	4.7	U	4.8	U
2-Butanone (MEK)	NL	NL	NL	NL				90	U	85	U	77	U	5	U	100	U	4.5	U	4.9	U	5.2	U	91	U	5	U	5	U	4.9	U	5	U	4.7	U	4.8	U
2-Hexanone	NL	NL	NL	NL				90	U	85	U	77	U	5	U	100	U	4.5	U	4.9	U	5.2	U	91	U	5	U	5	U	4.9	U	5	U	4.7	U	4.8	U
4-Methyl-2-pentanone (MIBK)	NL	NL	NL	NL				90	U	85	U	77	U	5	U	100	U	4.5	U	4.9	U	5.2	U	91	U	5	U	5	U	4.9	U	5	U	4.7	U	4.8	U
Acetone	7,800,000	100,000,000	16,000	**				90	U	85	U	77	U	5	U	100	U	4.5	U	4.9	U	5.2	U	91	U	5	U	6.8		4.9	U	5	U	4	Ja	4.8	U
Benzene	12,000	800	30	**				23	U	21	U	19	U	5	U	25	U	4.5	U	4.9	U	5.2	U	23	U	5	U	5	U	4.9	U	5	U	4.7	U	4.8	U
Bromodichloromethane	10,000	3,000,000	600	**				90	U	85	U	77	U	5	U	100	U	4.5	U	4.9	U	5.2	U	91	U	5	U	5	U	4.9	U	5	U	4.7	U	4.8	U
Bromoform	81,000	53,000	800	**				90	U	85	U	77	U	5	U	100	U	4.5	U	4.9	U	5.2	U	91	U	5	U	5	U	4.9	U	5	U	4.7	U	4.8	U
Bromomethane	110,000	10,000	200	**				90	U	85	U	77	U	5	U	100	U	4.5	U	4.9	U	5.2	U	91	U	5	U	5	U	4.9	U	5	U	4.7	U	4.8	U
Carbon disulfide	7,800,000	720,000	32,000	**				90	U	85	U	77	U	5	U	100	U	4.5	U	4.9	U	5.2	U	91	U	5	U	5	U	4.9	U	5	U	4.7	U	4.8	U
Carbon tetrachloride	5,000	300	70	**				90	U	85	U	77	U	5	U	100	U	4.5	U	4.9	U	5.2	U	91	U	5	U	5	U	4.9	U	5	U	4.7	U	4.8	U
Chlorobenzene	1,600,000	130,000	1,000	**				90	U	85	U	77	U	5	U	100	U	4.5	U	4.9	U	5.2	U	91	U	5	U	5	U	4.9	U	5	U	4.7	U	4.8	U
Chloroethane	NL	NL	NL	NL				90	U	85	U	77	U	5	U	100	U	4.5	U	4.9	U	5.2	U	91	U	5	U	5	U	4.9	U	5	U	4.7	U	4.8	U
Chloroform	100,000	300	600	**				90	U	85	U	77	U	5	U	100	U	4.5	U	4.9	U	5.2	U	91	U	5	U	5	U	4.9	U	5	U	4.7	U	4.8	U
Chloromethane	NL	NL	NL	NL				90	U	85	U	77	U	5	U	100	U	4.5	U	4.9	U	5.2	U	91	U	5	U	5	U	4.9	U	5	U	4.7	U	4.8	U
cis-1,3-Dichloropropene	NL	NL	NL	NL				90	U	85	U	77	U	5	U	100	U	4.5	U	4.9	U	5.2	U	91	U	5	U	5	U	4.9	U	5	U	4.7	U	4.8	U
Ethylbenzene	7,800,000	400,000	13,000	**				23	U	21	U	19	U	5	U	25	U	4.5	U	4.9	U	5.2	U	23	U	5	U	5	U	4.9	U	5	U	4.7	U	4.8	U
Methylene chloride	85,000	13,000	20	**				90	U	85	U	77	U	13		100	U	5.5		4.9		11		91	U	5	U	12		7.2		5	U	4.7	U	6.6	
Styrene	16,000,000	1,500,000	4,000	**				90	U	85	U	77	U	5	U	100	U	4.5	U	4.9	U	5.2	U	91	U	5	U	5	U	4.9	U	5	U	4.7	U	4.8	U
Tetrachloroethene	12,000	11,000	60	**				1,700		8,100		2,500		930		1,600		100		120		170		1,100		890		58		45		58		51		55	
Toluene	16,000,000	650,000	12,000	**				23	U	21	U	19	U	5	U	25	U	4.5	U	4.9	U	5.2	U	23	U	5	U	5	U	4.9	U	5	U	4.7	U	4.8	U
trans-1,3-Dichloropropene	NL	NL	NL	NL				90	U	85	U	77	U	5	U	100	U	4.5	U	4.9	U	5.2	U	91	U	5	U	5	U	4.9	U	5	U	4.7	U	4.8	U
Trichloroethene	58,000	5,000	60	**				90	U	190		77	U	5.7		100	U	5.7		5.6		8.2		67	Ja	54		5	U	4.9	U	5	U	4.7	U	4.8	U
Vinyl chloride	460	280	10	**				90	U	85	U	77	U	5	U	100	U	4.5	U	4.9	U	5.2	U	91	U	5	U	5	U	4.9	U	5	U	4.7	U	4.8	U
Xylenes (total)	160,000,000	320,000	150,000	**				68	U	64	U	57	U	5	U	76	U	4.5	U	4.9	U	5.2	U	68	U	5	U	5	U	4.9	U	5	U	4.7	U	4.8	U
DRO/JP-4								5,100	U	4,900	U	4,400	U	4,300	U	4,300	Ua	4,200	U	4,300	U	4,300	Ua	4,600	U	5,000	U	4,300	U	4,200	U	4,500	U	4,300	U	4,200	U
			ug/L					ug/L		ug/L		ug/L		ug/L		ug/L		ug/L		ug/L		ug/L		ug/L		ug/L		ug/L		ug/L		ug/L		ug/L		ug/L	
Arsenic,TCLP			50					50	U	50	U	50	U	50	U	50	U	50	U	50	U	50	U	50	U	50	U	50	U	50	U	50	U	50	U	50	U
Barium,TCLP			2,000					930	B	930		910	B	680	B	530	B	430	B	490	B	450	B	560	B	470	B	470	B	460	B	430	B	440	B	390	B
Cadmium,TCLP			5					3900		3	B	7		120		310		310		58		48		140		150		8		20		18		5	U	5	U
Chromium,TCLP			100					50	U	50	U	50	U	50	U	50	U	50	U	50	U	50	U	50	U	50	U	50	U	50	U	50	U	50	U	50	U
Lead,TCLP			7.5					7.5	U	22		12		43		6.3	B	7.5	U	7.5	U	7.5	U	7.5	U	7.5	U	7.5	U	7.5	U	7.5	U	7.5	U	7.5	U
Mercury,TCLP			2					2	U	2	U	2	U	2	U	2	U	2	U	2	U	2	U	2	U	2	U	2	U	2	U	2	U	2	U	2	U
Selenium,TCLP			50					50	U	50	U	50	U	50	U	50	U	50	U	50	U	50	U	50	U	50	U	50	U	50	U	50	U	50	U	50	U
Silver,TCLP			50					50	U	50	U	50	U	50	U	50	U	50	U	50	U	50	U	50	U	50	U	50	U	50	U	50	U	50	U	50	U

See endnotes for analytical qualifier explanation.

Appendix B
SOIL ANALYTICAL RESULTS – OUTSIDE CONTAINER STORAGE AREA (OSA)
(S1-S8) – VOCs, DRO/JP-4, and RCRA METALS
AREA 9/10
SER GROUNDWATER CONTAMINATION SUPERFUND SITE
ROCKFORD, IL
S6

Analyte	ROD - Preliminary Remedation Goals and/or Section 742.Table A: Tier 1 Soil Remediation Objectives for Residential Properties: Soil Ingestion (ug/kg)	Soil Inhalation (ug/kg)	Soil Component of Groundwater Class 1 (ug/kg)	ADL (ug/kg)	Units RES	Q	Location	SB-S6		SB-S6		SB-S6		SB-S6		SB-S6		SB-S6		SB-S6		SB-S6		SB-S6		SB-S6		SB-S6		SB-S6		SB-S6		SB-S6		SB-S6	
							Depth	0-2'		2-4'		4-6'		6-8'		8-10'		10-12'		12-14'		14-16'		16-18'		18-20'		20-22'		22-24'		24-26'		26-28'		28-30'		30-32'	
							Sample Date	10/29/2003		10/29/2003		10/29/2003		10/29/2003		10/29/2003		10/29/2003		10/29/2003		10/29/2003		10/29/2003		10/29/2003		10/29/2003		10/29/2003		10/29/2003		10/29/2003		10/29/2003		10/29/2003	
					Units			ug/kg		ug/kg		ug/kg		ug/kg		ug/kg		ug/kg		ug/kg		ug/kg		ug/kg		ug/kg		ug/kg		ug/kg		ug/kg		ug/kg		ug/kg		ug/kg	
1,1,1-Trichloroethane	NL	1,200,000	2,000	**				11		67		77		8		7.4		15		18		11		21		12		7.5		7.9		8.6		13		9.9		9.3	
1,1,2,2-Tetrachloroethane	NL	NL	NL	NL				5	U	4.7	U	4.4	U	5.2	U	5	U	4.9	U	4.4	U	5.1	U	5	U	5.6	U	5	U	5.3	U	5	U	5.4	U	4.2	U	5.1	U
1,1,2-Trichloroethane	310,000	1,800,000	20	**				5	U	4.7	U	4.4	U	5.2	U	5	U	4.9	U	4.4	U	5.1	U	5	U	5.6	U	5	U	5.3	U	5	U	5.4	U	4.2	U	5.1	U
1,1-Dichloroethane	7,800,000	1,300,000	23,000	**				5	U	8.9		18		5.2	U	5	U	4.9	U	4.2	Ja	5.1	U	5	U	5.6	U	5	U	5.3	U	5	U	5.4	U	4.2	U	5.1	U
1,1-Dichloroethene	700,000	1,500,000	60	**				5	U	4.7	U	4.4	U	5.2	U	5	U	4.9	U	4.4	U	5.1	U	5	U	5.6	U	5	U	5.3	U	5	U	5.4	U	4.2	U	5.1	U
1,2-Dichloroethane	7,000	400	20	**				5	U	4.7	U	4.4	U	5.2	U	5	U	4.9	U	4.4	U	5.1	U	5	U	5.6	U	5	U	5.3	U	5	U	5.4	U	4.2	U	5.1	U
1,2-Dichloroethene (total)	NL	NL	NL	NL				5	U	4.7	U	11		5.2	U	5	U	4.9	U	3.3	Ja	5.1	U	5	U	5.6	U	5	U	5.3	U	5	U	5.4	U	4.2	U	5.1	U
1,2-Dichloropropane	9,000	15,000	30	**				5	U	4.7	U	4.4	U	5.2	U	5	U	4.9	U	4.4	U	5.1	U	5	U	5.6	U	5	U	5.3	U	5	U	5.4	U	4.2	U	5.1	U
2-Butanone (MEK)	NL	NL	NL	NL				5	U	4.7	U	4.4	U	5.2	U	5.7		6.1	H	6.9		5.1	U	6.8		6.6		5	U	5.3	U	6.7		6.3		4.9		6.6	
2-Hexanone	NL	NL	NL	NL				5	U	4.7	U*	4.4	U	5.2	U	5	U	4.9	U	4.4	U	5.1	U	5	U	5.6	U	5	U	5.3	U	5	U	5.4	U	4.2	U	5.1	U
4-Methyl-2-pentanone (MIBK)	NL	NL	NL	NL				5	U	4.7	U*	4.4	U	5.2	U	5	U	4.9	U	4.4	U	5.1	U	5	U	5.6	U	5	U	5.3	U	5	U	5.4	U	4.2	U	5.1	U
Acetone	7,800,000	100,000,000	16,000	**				49		4.7	U	59		43		34		23		34		19		27		28		16		15		24		26		22		25	
Benzene	12,000	800	30	**				5	U	4.7	U	4.4	U	5.2	U	5	U	3.2	Ja	4.4	U	3.4	Ja	3	Ja	3.8	Ja	3.9	Ja	3.4	Ja	5	U	5.4	U	2.5	Ja	5.1	U
Bromodichloromethane	10,000	3,000,000	600	**				5	U	4.7	U	4.4	U	5.2	U	5	U	4.9	U	4.4	U	5.1	U	5	U	5.6	U	5	U	5.3	U	5	U	5.4	U	4.2	U	5.1	U
Bromoform	81,000	53,000	800	**				5	U	4.7	U*	4.4	U	5.2	U	5	U	4.9	U	4.4	U	5.1	U	5	U	5.6	U	5	U	5.3	U	5	U	5.4	U	4.2	U	5.1	U
Bromomethane	110,000	10,000	200	**				5	U	4.7	U*	4.4	U	5.2	U	5	U	4.9	U	4.4	U	5.1	U	5	U	5.6	U	5	U	5.3	U	5	U	5.4	U	4.2	U	5.1	U
Carbon disulfide	7,800,000	720,000	32,000	**				5	U	9.4		4.4	U	5.2	U	5	U	4.9	U	4.4	U	5.1	U	5	U	5.6	U	5	U	5.3	U	5	U	5.4	U	4.2	U	5.1	U
Carbon tetrachloride	5,000	300	70	**				5	U	4.7	U	4.4	U	5.2	U	5	U	4.9	U	4.4	U	5.1	U	5	U	5.6	U	5	U	5.3	U	5	U	5.4	U	4.2	U	5.1	U
Chlorobenzene	1,600,000	130,000	1,000	**				5	U	4.7	U	4.4	U	5.2	U	5	U	4.9	U	4.4	U	5.1	U	5	U	5.6	U	5	U	5.3	U	5	U	5.4	U	4.2	U	5.1	U
Chloroethane	NL	NL	NL	NL				5	U	4.7	U	4.4	U	5.2	U	5	U	4.9	U	4.4	U	5.1	U	5	U	5.6	U	5	U	5.3	U	5	U	5.4	U	4.2	U	5.1	U
Chloroform	100,000	300	600	**				5	U	4.7	U	4.4	U	5.2	U	5	U	4.9	U	4.4	U	5.1	U	5	U	5.6	U	5	U	5.3	U	5	U	5.4	U	4.2	U	5.1	U
Chloromethane	NL	NL	NL	NL				5	U	4.7	U	4.4	U	5.2	U	5	U	4.9	U	4.4	U	5.1	U	5	U	5.6	U	5	U	5.3	U	5	U	5.4	U	4.2	U	5.1	U
cis-1,3-Dichloropropene	NL	NL	NL	NL				5	U	4.7	U	4.4	U	5.2	U	5	U	4.9	U	4.4	U	5.1	U	5	U	5.6	U	5	U	5.3	U	5	U	5.4	U	4.2	U	5.1	U
Ethylbenzene	7,800,000	400,000	13,000	**				5	U	4.7	U	4.4	U	5.2	U	5	U	4.9	U	4.4	U	5.1	U	5	U	5.6	U	5	U	5.3	U	5	U	5.4	U	4.2	U	5.1	U
Methylene chloride	85,000	13,000	20	**				5	U	4.7	U	4.4	U	5.2	U	5	U	4.9	U	4.4	U	5.1	U	5	U	5.6	U	5	U	5.3	U	5	U	5.4	U	4.2	U	5.1	U
Styrene	16,000,000	1,500,000	4,000	**				5	U	4.7	U	4.4	U	5.2	U	5	U	4.9	U	4.4	U	5.1	U	5	U	5.6	U	5	U	5.3	U	5	U	5.4	U	4.2	U	5.1	U
Tetrachloroethene	12,000	11,000	60	**				44		140		80		6.8		13		21		21		20		41		24		20		19		21		30		19		22	
Toluene	16,000,000	650,000	12,000	**				5	U	4.7	U	4.4	U	5.2	U	7.9		8.9		7.1		9.2		8.1		10		9.8		8.6		7.8		8.2		6.5		8.3	
trans-1,3-Dichloropropene	NL	NL	NL	NL				5	U	4.7	U	4.4	U	5.2	U	5	U	4.9	U	4.4	U	5.1	U	5	U	5.6	U	5	U	5.3	U	5	U	5.4	U	4.2	U	5.1	U
Trichloroethene	58,000	5,000	60	**				5	U	4.7	U	3.8	Ja	5.2	U	5	U	4.9	U	4.4	U	5.1	U	5	U	5.6	U	5	U	5.3	U	5	U	5.4	U	4.2	U	5.1	U
Vinyl chloride	460	280	10	**				5	U	4.7	U	4.4	U	5.2	U	5	U	4.9	U	4.4	U	5.1	U	5	U	5.6	U	5	U	5.3	U	5	U	5.4	U	4.2	U	5.1	U
Xylenes (total)	160,000,000	320,000	150,000	**				5	U	4.7	U	4.4	U	5.2	U	5	U	4.9	U	4.4	U	5.1	U	5	U	5.6	U	5	U	5.3	U	5	U	5.4	U	4.2	U	5.1	U
DRO/JP-4								5,000	U*	5,000	U*	4,600	U*	4,400	U*	4,300	U*	4,300	U*	4,300	U*	4,200	U*	4,300	U*	4,700	U*	4,300	U*	4,400	U*	4,300	U*	4,300	U*	4,200	U*	4,200	U*
			ug/L					ug/L		ug/L		ug/L		ug/L		ug/L		ug/L		ug/L		ug/L		ug/L		ug/L		ug/L		ug/L		ug/L		ug/L		ug/L		ug/L	
Arsenic,TCLP			50					50	U	50	U	50	U	50	U	50	U	50	U	50	U	50	U	50	U	50	U	50	U	50	U	50	U	50	U	50	U	50	U
Barium,TCLP			2,000					390	B	810	B	810		540	B	390	B	390	B	400	B	360	B	450	B	380	B	370	B	330	B	330	B	320	B	420	B	460	B
Cadmium,TCLP			5					5	U	8		5	U	5	U	5	U	5	U	5	U	5	U	5	U	5	U	5	U	5	U	5	U	5	U	5	U	5	U
Chromium,TCLP			100					50	U	50	U	50	U	50	U	50	U	50	U	50	U	50	U	50	U	50	U	50	U	50	U	50	U	50	U	50	U	50	U
Lead,TCLP			7.5					7.5	U	110		7.5	U	7.5	U	7.5	U	7.5	U	7.5	U	7.5	U	7.5	U	7.5	U	7.5	U	7.5	U	7.5	U	7.5	U	7.5	U	7.5	U
Mercury,TCLP			2					2	U	2	U	2	U	2	U	2	U	2	U	2	U	2	U	2	U	2	U	2	U	2	U	2.3		2	U	2	U	2	U
Selenium,TCLP			50					50	U	50	U	50	U	50	U	50	U	50	U	50	U	50	U	50	U	50	U	50	U	50	U	50	U	50	U	50	U	50	U
Silver,TCLP			50					50	U	50	U	50	U	50	U	50	U	50	U	50	U	50	U	50	U	50	U	50	U	50	U	50	U	50	U	50	U	50	U

See endnotes for analytical qualifier explanation.

Appendix B
SOIL ANALYTICAL RESULTS – OUTSIDE CONTAINER STORAGE AREA (OSA)
(S1-S8) – VOCs, DRO/JP-4, and RCRA METALS
AREA 9/10
SER GROUNDWATER CONTAMINATION SUPERFUND SITE
ROCKFORD, IL
S7

Analyte	ROD - Preliminary Remedation Goals and/or Section 742.Table A: Tier 1 Soil Remediation Objectives for Residential Properties: Soil Ingestion (ug/kg)	Soil Inhalation (ug/kg)	Soil Component of Groundwater Class 1 (ug/kg)	ADL (ug/kg)	Units RES	Q	Location Depth Sample Date	SB-S7 2-4' 10/30/2003		SBD-S7 2-4' 10/30/2003		SB-S7 4-6' 10/30/2003		SB-S7 6-8' 10/30/2003		SB-S7 8-10' 10/30/2003		SB-S7 10-12' 10/30/2003		SB-S7 12-14' 10/30/2003		SB-S7 14-16' 10/30/2003		SB-S7 16-18' 10/30/2003		SB-S7 18-20' 10/30/2003		SB-S7 20-22' 10/30/2003		SB-S7 22-24' 10/30/2003		SB-S7 24-26' 10/30/2003		SBD-S7 24-26' 10/30/2003		SB-S7 26-28' 10/30/2003		SB-S7 28-30' 10/30/2003		SB-S7 30-32' 10/30/2003	
							Units	ug/kg		ug/kg		ug/kg		ug/kg		ug/kg		ug/kg		ug/kg		ug/kg		ug/kg		ug/kg		ug/kg		ug/kg		ug/kg		ug/kg		ug/kg		ug/kg		ug/kg	
1,1,1-Trichloroethane	NL	1,200,000	2,000	**				12,000		4400		130		15		14		50		14		6.8		11		210		6.8		18	H	7.2		10		7.7	H	14	H	19	H
1,1,2,2-Tetrachloroethane	NL	NL	NL	NL				95	U	110	U	5.8	U	4.7	U	5.3	U	5.3	U	5	U	5.2	U	5.3	U	5.4	U	5.2	U	5.5	U	5.3	U	5.2	U	5.4	U	5.3	U	5.2	U
1,1,2-Trichloroethane	310,000	1,800,000	20	**				95	U	110	U	5.8	U	4.7	U	5.3	U	5.3	U	5	U	5.2	U	5.3	U	5.4	U	5.2	U	5.5	U	5.3	U	5.2	U	5.4	U	5.3	U	5.2	U
1,1-Dichloroethane	7,800,000	1,300,000	23,000	**				370		130		20		4.7	U	5.3	U	5.4		5	U	5.2	U	5.3	U	48		5.2	U	5.5	U	5.3	U	5.2	U	5.4	U	5.3	U	5.2	U
1,1-Dichloroethene	700,000	1,500,000	60	**				95	U	110	U	5.8	U	4.7	U	5.3	U	5.3	U	5	U	5.2	U	5.3	U	5.4	U	5.2	U	5.5	U	5.3	U	5.2	U	5.4	U	5.3	U	5.2	U
1,2-Dichloroethane	7,000	400	20	**				95	U	110	U	5.8	U*	4.7	U*	5.3	U*	5.3	U*	5	U	5.2	U*	5.3	U*	5.4	U	5.2	U*	5.5	U	5.3	U*	5.2	U*	5.4	U	5.3	U	5.2	U
1,2-Dichloroethene (total)	NL	NL	NL	NL				220		94	J	23		3.3	Ja	5.3	U	6.3		5	U	5.2	U	5.3	U	52		5.2	U	5.5	U	5.3	U	5.2	U	5.4	U	5.3	U	3.8	Ja
1,2-Dichloropropane	9,000	15,000	30	**				95	U	110	U	5.8	U	4.7	U	5.3	U	5.3	U	5	U	5.2	U	5.3	U	5.4	U	5.2	U	5.5	U	5.3	U	5.2	U	5.4	U	5.3	U	5.2	U
2-Butanone (MEK)	NL	NL	NL	NL				95	U	110	U	5.8	U*	4.7	U*	5.3	U*	5.3	U*	5	U	5.2	U*	5.3	U*	5.4	U	5.2	U*	5.5	U	5.3	U*	5.2	U*	5.4	U	5.3	U	5.2	U
2-Hexanone	NL	NL	NL	NL				95	U	110	U	5.8	U	4.7	U	5.3	U	5.3	U	5	U*	5.2	U	5.3	U	5.4	U*	5.2	U	5.5	U*	5.3	U	5.2	U	5.4	U*	5.3	U*	5.2	U*
4-Methyl-2-pentanone (MIBK)	NL	NL	NL	NL				95	U	110	U	5.8	U*	4.7	U*	5.3	U*	5.3	U*	5	U*	5.2	U*	5.3	U*	5.4	U*	5.2	U*	5.5	U*	4.3	U*	5.2	U*	5.4	U*	5.3	U*	5.2	U*
Acetone	7,800,000	100,000,000	16,000	**				95	U	110	U	71	*	44	*	36	*	25	*	10		5.2	U*	5.3	U*	5.4	U	18	*	13		14	*	20	*	14		17		20	
Benzene	12,000	800	30	**				24	U	29	U	5.8	U	4.7	U	5.3	U	5.3	U	5	U	5.2	U	5.3	U	5.2	Ja	5.2	U	5.5	U	3.4	U	5.2	U	5.4	U	5.3	U	5.2	U
Bromodichloromethane	10,000	3,000,000	600	**				95	U	110	U	5.8	U*	4.7	U*	5.3	U*	5.3	U*	5	U	5.2	U*	5.3	U*	5.4	U	5.2	U*	5.5	U	5.3	U*	5.2	U*	5.4	U	5.3	U	5.2	U
Bromoform	81,000	53,000	800	**				95	U	110	U	5.8	U	4.7	U	5.3	U	5.3	U	5	U*	5.2	U	5.3	U	5.4	U*	5.2	U	5.5	U*	5.3	U	5.2	U	5.4	U*	5.3	U*	5.2	U*
Bromomethane	110,000	10,000	200	**				95	U	110	U	5.8	U	4.7	U	5.3	U	5.3	U	5	U*	5.2	U	5.3	U	5.4	U*	5.2	U	5.5	U*	5.3	U	5.2	U	5.4	U*	5.3	U*	5.2	U*
Carbon disulfide	7,800,000	720,000	32,000	**				95	U	110	U	5.8	U	4.7	U	5.3	U	5.3	U	5	U	5.2	U	5.3	U	5.4	U	5.2	U	5.5	U	5.3	U	5.2	U	5.4	U	5.3	U	5.2	U
Carbon tetrachloride	5,000	300	70	**				95	U	110	U	5.8	U	4.7	U	5.3	U	5.3	U	5	U	5.2	U	5.3	U	5.4	U	5.2	U	5.5	U	5.3	U	5.2	U	5.4	U	5.3	U	5.2	U
Chlorobenzene	1,600,000	130,000	1,000	**				95	U	110	U	5.8	U	4.7	U	5.3	U	5.3	U	5	U	5.2	U	5.3	U	5.4	U	5.2	U	5.5	U	5.3	U	5.2	U	5.4	U	5.3	U	5.2	U
Chloroethane	NL	NL	NL	NL				95	U	110	U	5.8	U*	4.7	U*	5.3	U*	5.3	U*	5	U	5.2	U*	5.3	U*	5.4	U	5.2	U*	5.5	U	5.3	U*	5.2	U*	5.4	U	5.3	U	5.2	U
Chloroform	100,000	300	600	**				95	U	110	U	5.8	U*	4.7	U*	5.3	U*	5.3	U*	5	U	5.2	U*	5.3	U*	5.4	U	5.2	U*	5.5	U	5.3	U*	5.2	U*	5.4	U	5.3	U	5.2	U
Chloromethane	NL	NL	NL	NL				95	U	110	U	5.8	U	4.7	U	5.3	U	5.3	U	5	U	5.2	U	5.3	U	5.4	U	5.2	U	5.5	U	5.3	U	5.2	U	5.4	U	5.3	U	5.2	U
cis-1,3-Dichloropropene	NL	NL	NL	NL				95	U	110	U	5.8	U	4.7	U	5.3	U	5.3	U	5	U	5.2	U	5.3	U	5.4	U	5.2	U	5.5	U	5.3	U	5.2	U	5.4	U	5.3	U	5.2	U
Ethylbenzene	7,800,000	400,000	13,000	**				24	U	29	U	5.8	U	4.7	U	5.3	U	5.3	U	5	U	5.2	U	5.3	U	5.4	U	5.2	U	5.5	U	5.3	U	5.2	U	5.4	U	5.3	U	5.2	U
Methylene chloride	85,000	13,000	20	**				95	U	110	U	5.8	U	4.7	U	5.3	U	5.3	U	5	U	5.2	U	11		5.4	U	5.2	U	5.5	U	5.3	U	5.2	U	5.4	U	5.3	U	5.2	U
Styrene	16,000,000	1,500,000	4,000	**				95	U	110	U	5.8	U	4.7	U	5.3	U	5.3	U	5	U	5.2	U	5.3	U	5.4	U	5.2	U	5.5	U	5.3	U	5.2	U	5.4	U	5.3	U	5.2	U
Tetrachloroethene	12,000	11,000	60	**				49,000		17,000		84		18		28		60		34		30		47		590		16		42		25		24		24		34		40	
Toluene	16,000,000	650,000	12,000	**				24	U	29	U	5.8	U	4.7	U	5.3	U	5.3	U	7.4		5.2	U	5.3	U	9.7		6.7		7.6		8.5		6.5		7.3		7.2		7.5	H
trans-1,3-Dichloropropene	NL	NL	NL	NL				95	U	110	U	5.8	U	4.7	U	5.3	U	5.3	U	5	U	5.2	U	5.3	U	5.4	U	5.2	U	5.5	U	5.3	U	5.2	U	5.4	U	5.3	U	5.2	U
Trichloroethene	58,000	5,000	60	**				670		270		6		4.7	U	5.3	U	5.3	U	5	U	5.2	U	5.3	U	15		5.2	U	5.5	U	5.3	U	5.2	U	5.4	U	5.3	U	5.2	U
Vinyl chloride	460	280	10	**				95	U	110	U	5.8	U	4.7	U	5.3	U	5.3	U	5	U	5.2	U	5.3	U	5.4	U	5.2	U	5.5	U	5.3	U	5.2	U	5.4	U	5.3	U	5.2	U
Xylenes (total)	160,000,000	320,000	150,000	**				71	U	86	U	5.8	U	4.7	U	5.3	U	5.3	U	5	U	5.2	U	5.3	U	5.4	U	5.2	U	5.5	U	5.3	U	5.2	U	5.4	U	5.3	U	5.2	U
DRO/JP-4								4,900	U	4,900	U	4,900	U	4,400	U	4,400	U	4,400	U	4,200	U	4,300	U	4,300	U	5,000	U	4,200	U	4,300	U	4,200	U	4,200	U	4,200	U	4,500	U	4,200	U
			ug/L					ug/L		ug/L		ug/L		ug/L		ug/L		ug/L		ug/L		ug/L		ug/L		ug/L		ug/L		ug/L		ug/L		ug/L		ug/L		ug/L		ug/L	
Arsenic,TCLP			50					50	U	50	U	50	U	50	U	50	U	50	U	50	U	50	U	50	U	50	U	50	U	50	U	50	U	50	U	50	U	50	U	50	U
Barium,TCLP			2,000					460		510		690	B	610	B	530	B	650	B	420	B	130	B	130	B	390	B	410	B	340	B	420	B	330	B	360	B	350	B	380	B
Cadmium,TCLP			5					5	U	5	U	5	U	5	U	5	U	5	U	5	U	5	U	5	U	5	U	5	U	5	U	5	U	5	U	5	U	5	U	5	U
Chromium,TCLP			100					50	U	50	U	50	U	50	U	50	U	50	U	50	U	50	U	50	U	50	U	50	U	50	U	50	U	50	U	50	U	50	U	50	U
Lead,TCLP			7.5					28		7.5		7.5	U	7.5	U	7.5	U	7.5	U	7.5	U	7.5	U	7.5	U	7.5	U	7.5	U	7.5	U	7.5	U	7.5	U	7.5	U	7.5	U	7.5	U
Mercury,TCLP			2					2	U	2	U	2	U	2	U	2	U	2	U	2	U	2	U	2	U	2	U	2	U	2	U	2	U	2	U	2	U	2	U	2	U
Selenium,TCLP			50					50	U	50	U	50	U	50	U	50	U	50	U	50	U	50	U	50	U	50	U	50	U	50	U	50	U	50	U	50	U	50	U	50	U
Silver,TCLP			50					50	U	50	U	50	U	50	U	50	U	50	U	50	U	50	U	50	U	50	U	50	U	50	U	50	U	50	U	50	U	50	U	50	U

See endnotes for analytical qualifier explanation.

Appendix B
SOIL ANALYTICAL RESULTS – OUTSIDE CONTAINER STORAGE AREA (OSA)
(S1-S8) – VOCs, DRO/JP-4, and RCRA METALS
AREA 9/10
SER GROUNDWATER CONTAMINATION SUPERFUND SITE
ROCKFORD, IL
S8

Analyte	ROD - Preliminary Remedation Goals and/or Section 742.Table A: Tier 1 Soil Remediation Objectives for Residential Properties: Soil Ingestion (ug/kg)	Soil Inhalation (ug/kg)	Soil Component of Groundwater Class 1 (ug/kg)	ADL (ug/kg)	Units RES	Q	Location	SB-S8		SB-S8		SB-S8		SB-S8		SBD-S8		SB-S8		SB-S8		SB-S8		SB-S8		SB-S8		SBD-S8		SB-S8		SB-S8		SB-S8		SB-S8		SB-S8		SB-S8	
							Depth	2-4'		4-6'		6-8'		8-10'		8-10'		10-12'		12-14'		14-16'		16-18'		18-20'		18-20'		20-22'		22-24'		24-26'		26-28'		28-30'		30-32'	
							Sample Date	10/30/2003		10/30/2003		10/30/2003		10/30/2003		10/30/2003		10/30/2003		10/30/2003		10/30/2003		10/30/2003		10/30/2003		10/30/2003		10/30/2003		10/30/2003		10/30/2003		10/30/2003		10/30/2003		10/30/2003	
								ug/kg		ug/kg		ug/kg		ug/kg		ug/kg		ug/kg		ug/kg		ug/kg		ug/kg		ug/kg		ug/kg		ug/kg		ug/kg		ug/kg		ug/kg		ug/kg		ug/kg	
1,1,1-Trichloroethane	NL	1,200,000	2,000	**				500		120		31		10		7.8		24		8.3		12		11		48		110		16		23		6.2		26		7.8		8.9	
1,1,2,2-Tetrachloroethane	NL	NL	NL	NL				92	U	4.7	U	4.5	U	5.1	U	4.8	U	4.3	U	4.9	U	5	U	5.2	U	5.5	U	4.6	U	4.1	U	5.2	U	5.3	U	4.9	U	5.1	U	5.2	U
1,1,2-Trichloroethane	310,000	1,800,000	20	**				92	U	4.7	U	4.5	U	5.1	U	4.8	U	4.3	U	4.9	U	5	U	5.2	U	5.5	U	4.6	U	4.1	U	5.2	U	5.3	U	4.9	U	5.1	U	5.2	U
1,1-Dichloroethane	7,800,000	1,300,000	23,000	**				92	U	13		3.9	Ja	5.1	U	4.8	U	4.3	U	4.9	U	5	U	5.2	U	5.5	U	4.6	U	3.9	Ja	5.2	U	5.3	U	2.9	Ja	5.1	U	5.2	U
1,1-Dichloroethene	700,000	1,500,000	60	**				92	U	4.7	U	4.5	U	5.1	U	4.8	U	4.3	U	4.9	U	5	U	5.2	U	5.5	U	4.6	U	4.1	U	5.2	U	5.3	U	4.9	U	5.1	U	5.2	U
1,2-Dichloroethane	7,000	400	20	**				92	U	4.7	U	4.5	U	5.1	U	4.8	U	4.3	U	4.9	U	5	U	5.2	U	5.5	U	4.6	U	4.1	U	5.2	U	5.3	U	4.9	U	5.1	U	5.2	U
1,2-Dichloroethene (total)	NL	NL	NL	NL				92	U	21		6.8		5.1	U	4.8	U	4.5		4.9	U	5	U	5.2	U	13		28		7		3.2	Ja	5.3	U	6		5.1	U	5.2	U
1,2-Dichloropropane	9,000	15,000	30	**				92	U	4.7	U	4.5	U	5.1	U	4.8	U	4.3	U	4.9	U	5	U	5.2	U	5.5	U	4.6	U	4.1	U	5.2	U	5.3	U	4.9	U	5.1	U	5.2	U
2-Butanone (MEK)	NL	NL	NL	NL				92	U	5.3		4.8		5.1	U	4.8	U	4.3	U	4.9	U	5	U	5.2	U	5.5	U	4.6	U	4.1	U	5.2	U	5.3	U	4.9	U	5.1	U	5.2	U
2-Hexanone	NL	NL	NL	NL				92	U	4.7	U	4.5	U	5.1	U	4.8	U	4.3	U	4.9	U	5	U	5.2	U	5.5	U	4.6	U	4.1	U	5.2	U	5.3	U	4.9	U	5.1	U	5.2	U
4-Methyl-2-pentanone (MIBK)	NL	NL	NL	NL				92	U	4.7	U	4.5	U	5.1	U	4.8	U	4.3	U	4.9	U	5	U	5.2	U	5.5	U	4.6	U	4.1	U	5.2	U	5.3	U	4.9	U	5.1	U	5.2	U
Acetone	7,800,000	100,000,000	16,000	**				92	U	52		30		5.1	U	4.8	U	4.3	U	4.9	U	5	U	5.2	U	5.5	U	4.6	U	4.1	U	5.2	U	5.3	U	4.9	U	5.1	U	5.2	U
Benzene	12,000	800	30	**				23	U	4.7	U	4.5	U	5.1	U	4.8	U	4.3	U	4.9	U	5	U	5.2	U	5.5	U	3.0	J	4.1	U	5.2	U	5.3	U	4.9	U	5.1	U	5.2	U
Bromodichloromethane	10,000	3,000,000	600	**				92	U	4.7	U	4.5	U	5.1	U	4.8	U	4.3	U	4.9	U	5	U	5.2	U	5.5	U	4.6	U	4.1	U	5.2	U	5.3	U	4.9	U	5.1	U	5.2	U
Bromoform	81,000	53,000	800	**				92	U	4.7	U	4.5	U	5.1	U	4.8	U	4.3	U	4.9	U	5	U	5.2	U	5.5	U	4.6	U	4.1	U	5.2	U	5.3	U	4.9	U	5.1	U	5.2	U
Bromomethane	110,000	10,000	200	**				92	U	4.7	U	4.5	U	5.1	U	4.8	U	4.3	U	4.9	U	5	U	5.2	U	5.5	U	4.6	U	4.1	U	5.2	U	5.3	U	4.9	U	5.1	U	5.2	U
Carbon disulfide	7,800,000	720,000	32,000	**				92	U	4.7	U	4.5	U	5.1	U	4.8	U	4.3	U	4.9	U	5	U	5.2	U	5.5	U	4.6	U	4.1	U	5.2	U	5.3	U	4.9	U	5.1	U	5.2	U
Carbon tetrachloride	5,000	300	70	**				92	U	4.7	U	4.5	U	5.1	U	4.8	U	4.3	U	4.9	U	5	U	5.2	U	5.5	U	4.6	U	4.1	U	5.2	U	5.3	U	4.9	U	5.1	U	5.2	U
Chlorobenzene	1,600,000	130,000	1,000	**				92	U	4.7	U	4.5	U	5.1	U	4.8	U	4.3	U	4.9	U	5	U	5.2	U	5.5	U	4.6	U	4.1	U	5.2	U	5.3	U	4.9	U	5.1	U	5.2	U
Chloroethane	NL	NL	NL	NL				92	U	4.7	U	4.5	U	5.1	U	4.8	U	4.3	U	4.9	U	5	U	5.2	U	5.5	U	4.6	U	4.1	U	5.2	U	5.3	U	4.9	U	5.1	U	5.2	U
Chloroform	100,000	300	600	**				92	U	4.7	U	4.5	U	5.1	U	4.8	U	4.3	U	4.9	U	5	U	5.2	U	5.5	U	4.6	U	4.1	U	5.2	U	5.3	U	4.9	U	5.1	U	5.2	U
Chloromethane	NL	NL	NL	NL				92	U	4.7	U	4.5	U	5.1	U	4.8	U	4.3	U	4.9	U	5	U	5.2	U	5.5	U	4.6	U	4.1	U	5.2	U	5.3	U	4.9	U	5.1	U	5.2	U
cis-1,3-Dichloropropene	NL	NL	NL	NL				92	U	4.7	U	4.5	U	5.1	U	4.8	U	4.3	U	4.9	U	5	U	5.2	U	5.5	U	4.6	U	4.1	U	5.2	U	5.3	U	4.9	U	5.1	U	5.2	U
Ethylbenzene	7,800,000	400,000	13,000	**				23	U	4.7	U	4.5	U	5.1	U	4.8	U	4.3	U	4.9	U	5	U	5.2	U	5.5	U	4.6	U	4.1	U	5.2	U	5.3	U	4.9	U	5.1	U	5.2	U
Methylene chloride	85,000	13,000	20	**				92	U	4.7	U	4.5	U	5.1	U	4.8	U	4.3	U	4.9	U	5	U	5.2	U	5.5	U	4.6	U	4.1	U	5.2	U	5.3	U	4.9	U	5.1	U	5.2	U
Styrene	16,000,000	1,500,000	4,000	**				92	U	4.7	U	4.5	U	5.1	U	4.8	U	4.3	U	4.9	U	5	U	5.2	U	5.5	U	4.6	U	4.1	U	5.2	U	5.3	U	4.9	U	5.1	U	5.2	U
Tetrachloroethene	12,000	11,000	60	**				2,800		150		39		38		29		57		32		53		46		110		630		45		72		25		65		30		33	
Toluene	16,000,000	650,000	12,000	**				23	U	4.7	U	4.5	U	5.1	U	4.8	U	4.3	U	4.9	U	5	U	5.2	U	5.5	U	6.1		4.1	U	5.2	U	5.3	U	4.9	U	5.1	U	5.2	U
trans-1,3-Dichloropropene	NL	NL	NL	NL				92	U	4.7	U	4.5	U	5.1	U	4.8	U	4.3	U	4.9	U	5	U	5.2	U	5.5	U	4.6	U	4.1	U	5.2	U	5.3	U	4.9	U	5.1	U	5.2	U
Trichloroethene	58,000	5,000	60	**				110		12		3	Ja	5.1	U	4.8	U	3.9	Ja	4.9	U	5	U	5.2	U	7.2		13		2.7	Ja	3.7	Ja	5.3	U	4.2	Ja	5.1	U	5.2	U
Vinyl chloride	460	280	10	**				92	U	4.7	U	4.5	U	5.1	U	4.8	U	4.3	U	4.9	U	5	U	5.2	U	5.5	U	4.6	U	4.1	U	5.2	U	5.3	U	4.9	U	5.1	U	5.2	U
Xylenes (total)	160,000,000	320,000	150,000	**				69	U	4.7	U	4.5	U	5.1	U	4.8	U	4.3	U	4.9	U	5	U	5.2	U	5.5	U	4.6	U	4.1	U	5.2	U	5.3	U	4.9	U	5.1	U	5.2	U
DRO/JP-4								5,000	U	4,800	U	4,700	U	4,200	U	4,300	U	4,400	U	4,300	U	4,300	U	4,300	U	5,000	U	4200	U	4,200	U	4,300	U	4,400	U	4,300	U	4,400	U	4,200	U
			ug/L					ug/L		ug/L		ug/L		ug/L		ug/L		ug/L		ug/L		ug/L		ug/L		ug/L		ug/L		ug/L		ug/L		ug/L		ug/L		ug/L		ug/L	
Arsenic,TCLP			50					50	U	50	U	50	U	50	U	50	U	50	U	50	U	50	U	50	U	50	U	50	U	50	U	50	U	50	U	50	U	50	U	50	U
Barium,TCLP			2,000					380		890	B	620	B	390	B	430	B	390	B	530	B	200	B	410	B	390	B	350	B	140	B	440	B	410	B	390	B	380	B	460	B
Cadmium,TCLP			5					20		12		4	B	5	U	5	U	5	U	5	U	4	B	5	U	47		5	U	5	U	5	U	5	U	5	U	5	U	5	U
Chromium,TCLP			100					50	U	50	U	50	U	50	U	50	U	50	U	50	U	50	U	50	U	50	U	50	U	50	U	50	U	50	U	50	U	50	U	50	U
Lead,TCLP			7.5					7.5	U	7.5	U	7.5	U	7.5	U	7.5	U	7.5	U	7.5	U	7.5	U	7.5	U	7.5	U	7.5	U	7.5	U	7.5	U	7.5	U	7.5	U	7.5	U	7.5	U
Mercury,TCLP			2					2	U	2	U	2	U	2	U	2	U	2	U	2	U	2	U	2	U	2	U	2	U	2	U	2	U	2	U	2	U	2	U	2	U
Selenium,TCLP			50					50	U	50	U	50	U	50	U	50	U	50	U	50	U	50	U	50	U	50	U	50	U	50	U	50	U	50	U	50	U	50	U	50	U
Silver,TCLP			50					50	U	50	U	50	U	50	U	50	U	50	U	50	U	50	U	50	U	50	U	50	U	50	U	50	U	50	U	50	U	50	U	50	U

See endnotes for analytical qualifier explanation.

Appendix B
SOIL ANALYTICAL RESULTS – OUTSIDE CONTAINER STORAGE AREA (OSA)
(S1-S8) – VOCs, DRO/JP-4, and RCRA METALS
AREA 9/10
SER GROUNDWATER CONTAMINATION SUPERFUND SITE
ROCKFORD, IL
ENDNOTES

Analytical Table Notes:

Sample Collection Method
SB - Soil Boring
GW - Groundwater

General Abbreviations and Symbols
NL - Not Listed
Res - Result or Reporting Limit
RO - Remediation Objective
Q - Qualifier
** - Less than or equal to specified RO

Data Presentation

0.005	U	Not detected at specified Reporting Limit
0.005	**U**	(Bold) Detection limit above lowest specified RO
0.005		(Bold, Italic) Indicates compound detected but below lowest specified RO
0.005		(Bold, Italic, Shaded) Indicates compound detected above lowest specified RO
		(Blank) Indicates no analytical data for compound

Analytical Data Qualifiers
B - (Metals) Results less than reporting limit but greater than or equal to Method Detection Limit
E - Result exceeds calibration range, secondary dilution required
U - Not Detected
J - Estimated value below the Reporting Limit
a - Concentration is below the Method Reporting Limit
* - Batch QC exceeded the upper or lower control limits
H - Result based on an alternative peak selection upon analytical review
M - Manually Integrated Compound
- Concentration above Background Level but below lowest RO

APPENDIX C

HRC-X Product Information & Calculation Spreadsheet

HRC-X™
HYDROGEN RELEASE COMPOUND
[*eXtended release formula*]

HYDROGEN RELEASE COMPOUND (HRC-X™)

[*eXtended release formula*]

HRC-X is specifically formulated to treat residual DNAPL in groundwater and to provide a long term solution for groundwater contaminant plume control

How it Works

HRC-X is a special formulation of the patented and widely accepted Hydrogen Release Compound (HRC®), which has been successfully applied on hundreds of project sites world-wide for the cost-effective, *in-situ* treatment of groundwater contamination.

HRC-X is a viscous material, composed of glycerol polylactate, which is injected directly into the contaminated subsurface. Once in place, and in the vast majority of cases, HRC-X produces reducing conditions for periods of at least 3 to 5 years. These conditions are created and sustained as a result of lactic acid and ultimately hydrogen, that is released from HRC-X. This hydrogen, in turn, is used by microbes to degrade chlorinated solvent-type contaminants through a well understood process known as reductive dechlorination.

HRC-X can be used to degrade a range of contaminants including: degreasing agents (PCE, TCE, TCA and their breakdown products), carbon tetrachloride, chloroform, perchlorate, nitrate, and certain pesticides/herbicides.

Residual DNAPL Treatment

Residual Dense Non-Aqueous Phase Liquids (DNAPL's) are often difficult to find and very costly to treat. Residual DNAPL causes a lingering and unwanted source of groundwater contamination that can represent enormous and unexpected cleanup costs.

HRC-X is a proven solution to this challenging problem. Once injected into the general vicinity of the residual DNAPL, HRC-X goes to work releasing lactic acid and cost effectively producing the desired hydrogen throughout the area. This, in turn, drives the rapid desorption, dissolution, and degradation of the bound residual DNAPL. (Figure 1).

Since HRC-X facilitates a microbial driven process, it can be applied without the need to identify the exact location of the residual DNAPL, avoiding costs associated with detailed site analysis. Additionally, HRC-X does not require stationary equipment, any on-going power supply, piping, long-term operations and maintenance or labor costs. These characteristics alone can significantly reduce the costs of residual DNAPL remediation.

Long Term, Low Cost Plume Control

When long-term plume control is required to halt the migration of groundwater contaminants, HRC-X may be one of the most cost effective alternatives available. In the past, the only alternative in these situations was to cut-off the plume by intercepting the groundwater with very inefficient and costly pump and treat systems, or by disruptive construction of expensive sheet pile barriers and "iron filing walls."

Groundwater remediation professionals now have an effective alternative to offer their clients and to reduce their cost burden, HRC-X. When applied perpendicular to the migrating plume, HRC-X passively releases the hydrogen required to degrade the mobile contaminant flux. The HRC-X material, once installed, continues to release hydrogen, effectively "cutting off" the migrating plume for a period in excess of 3 years, while avoiding the capital costs associated with engineering, construction and O&M intensive systems.

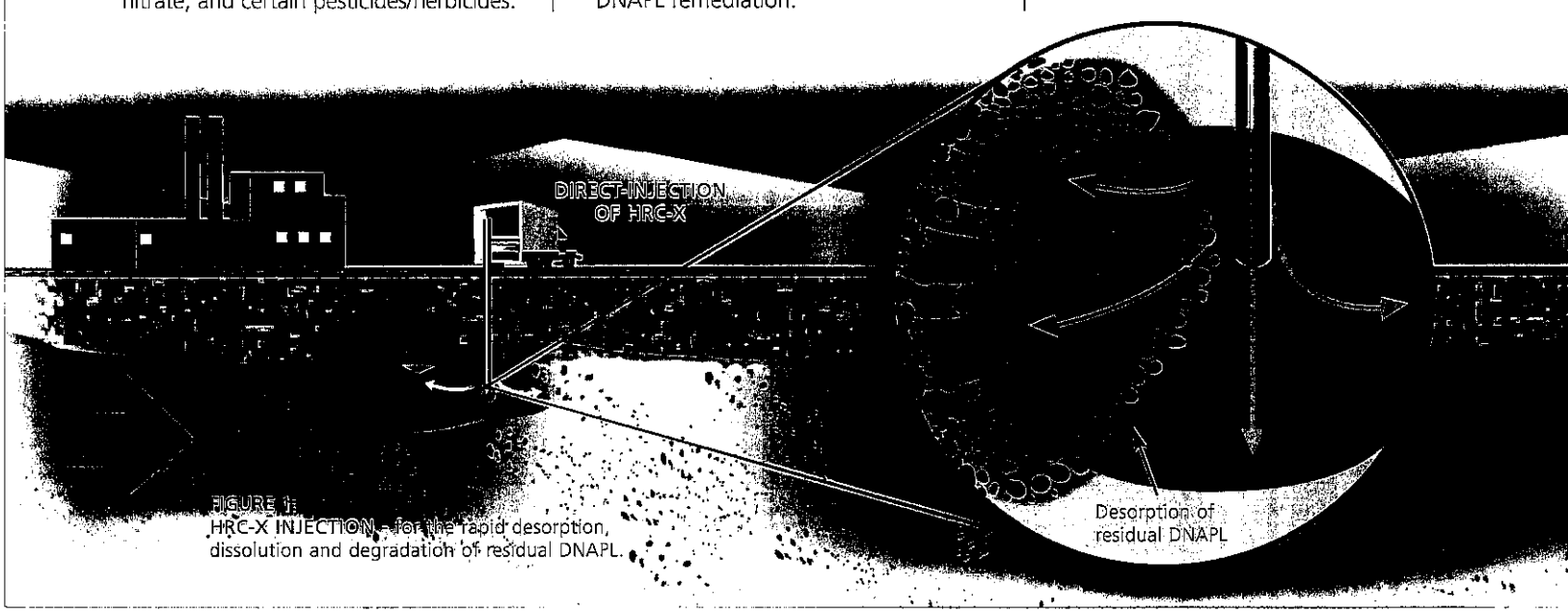

FIGURE 1:
HRC-X INJECTION - for the rapid desorption, dissolution and degradation of residual DNAPL.

HRC Design Software for Plume Area/Grid Treatment

Regenesis Technical Support: USA (949) 366-8000, www.regenesis.com

Site Name:
Location:
Consultant:

Site Conceptual Model/Extent of Plume Requiring Remediation

Width of plume (intersecting gw flow direction)	0	ft		
Length of plume (parallel to gw flow direction)	0	ft	=	-
Depth to contaminated zone	0	ft		
Thickness of contaminated saturated zone	0	ft		
Nominal aquifer soil (gravel, sand, silty sand, silt, clay)	sand			
Total porosity	0		Eff. porosity:	0
Hydraulic conductivity	0	ft/day	=	0.0E+00
Hydraulic gradient	0	ft/ft		
Seepage velocity	#DIV/0!	ft/yr	=	#DIV/0!
Treatment Zone Pore Volume	-	ft^3	=	-

Dissolved Phase Electron Donor Demand	Contaminant Conc (mg/L)	Contaminant Mass (lb)	Stoich. (wt/wt) contam/H_2
Tetrachloroethene (PCE)	0.00	0.0	20.7
Trichloroethene (TCE)	0.00	0.0	21.9
cis-1,2-dichloroethene (DCE)	0.00	0.0	24.2
Vinyl Chloride (VC)	0.00	0.0	31.2
Carbon tetrachloride	0.00	0.0	19.2
Chloroform	0.00	0.0	19.9
1,1,1-Trichloroethane (TCA)	0.00	0.0	22.2
1,1-Dichlorochloroethane (DCA)	0.00	0.0	24.7
Hexavalent Chromium	0.00	0.0	17.3
User added, also add stoichiometric demand	0.00	0.0	0.0
User added, also add stoichiometric demand	0.00	0.0	0.0

Sorbed Phase Electron Donor Demand

Soil bulk density	1.76	g/cm^3	=	110
Fraction of organic carbon: foc	0.01	range: 0.0001 to 0.01		

(Values are estimated using Soil Conc=foc*Koc*Cgw)
(Adjust Koc as nec. to provide realistic estimates)

	Koc (L/kg)	Contaminant Conc (mg/kg)	Contaminant Mass (lb)	Stoich. (wt/wt) contam/H_2
Tetrachloroethene (PCE)	263	0.00	0.0	20.7
Trichloroethene (TCE)	107	0.00	0.0	21.9
cis-1,2-dichloroethene (DCE)	80	0.00	0.0	24.2
Vinyl Chloride (VC)	2.5	0.00	0.0	31.2
Carbon tetrachloride	110	0.00	0.0	19.2
Chloroform	34	0.00	0.0	19.9
1,1,1-Trichloroethane (TCA)	183	0.00	0.0	22.2
1,1-Dichlorochloroethane (DCA)	183	0.00	0.0	24.7
User added, also add stoichiometric demand	0	0.00	0.0	0.0
User added, also add stoichiometric demand	0	0.00	0.0	0.0

Competing Electron Acceptors	Electron Acceptor Conc (mg/L)	Electron Acceptor Mass (lb)	Stoich. (wt/wt) elec acceptor/H_2
Oxygen	5.00	0	8.0
Nitrate	5.00	0	12.4
Est. Mn reduction demand (potential amt of Mn2+ formed)	5.00	0	27.5
Est. Fe reduction demand (potential amt of Fe2+ formed)	25.00	0	55.9
Estimated sulfate reduction demand	200.00	0	12.0

Microbial Demand Factor	3	Recommend 1-4x
Safety Factor	2	Recommend 1-4x

Injection Point Spacing and Dose:

Injection spacing within rows (ft)	10.0	# points per row:	0
Injection spacing between rows (ft)	10.0	# of rows:	0
Advective travel time bet. rows (days)	#DIV/0!	Total # of points:	0
		Minimum req. HRC dose per foot (lb/ft)	#DIV/0!

#DIV/0!

Project Summary			
Number of HRC delivery points (adjust as nec. for site)		0	
HRC Dose in lb/foot (adjust as nec. for site)		#DIV/0!	#DIV/0!
Corresponding amount of HRC per point (lb)		#DIV/0!	
Number of 30 lb HRC Buckets per injection point		#DIV/0!	
Total Number of 30 lb Buckets		#DIV/0!	
Total Amt of HRC (lb)		#DIV/0!	
HRC Cost		#DIV/0!	#DIV/0!
Total Material Cost		**#DIV/0!**	#DIV/0!
Shipping and Tax Estimates in US Dollars			
Sales Tax	rate: 0%	#DIV/0!	
Total Matl. Cost		#DIV/0!	
Shipping of HRC (call for amount)		$ -	
Total Regenesis Material Cost		**#DIV/0!**	

APPENDIX H

IEPA Model Environmental Land Use Control Form

PREPARED BY:

Name: _____

Address:

RETURN TO:

Name: _____

Address:

THE ABOVE SPACE FOR RECORDER'S OFFICE

Model Environmental Land Use Control

THIS ENVIRONMENTAL LAND USE CONTROL ("ELUC"), is made this _____ day of _____, 20__, by _____, ("Property Owner") of the real property located at the common address_____("Property").

WHEREAS, 415 ILCS 5/58.17 and 35 Ill. Adm. Code 742 provide for the use of an ELUC as an institutional control in order to impose land use limitations or requirements related to environmental contamination so that persons conducting remediation can obtain a No Further Remediation determination from the Illinois Environmental Protection Agency ("IEPA"). The reason for an ELUC is to ensure protection of human health and the environment. The limitations and requirements contained herein are necessary in order to protect against exposure to contaminated soil or groundwater, or both, that may be present on the Property as a result of [**VARIABLE**] activities. Under 35 Ill. Adm. Code 742, the use of risk-based, site-specific remediation objectives may require the use of an ELUC on real property, and the ELUC may apply to certain physical features (e.g., engineered barriers, monitoring wells, caps, etc.).

WHEREAS, _____ [**the party performing remediation**] intends to request risk-based, site specific soil and groundwater remediation objectives from IEPA under 35 Ill. Adm. Code 742 to obtain risk-based closure of the site, identified by Bureau of Land [**10-digit LPC or Identification number**] _____, utilizing an ELUC that will apply to the Property.

NOW, THEREFORE, the recitals set forth above are incorporated by reference as if fully set forth herein, and the Property Owner agrees as follows:

Section One. Property Owner does hereby establish an ELUC on the real estate, situated in the County of _____, State of Illinois and further described in Exhibit A attached hereto and incorporated herein by reference (the "Property").

Attached as Exhibit B are site maps that show the legal boundary of the Property, any physical features to which the ELUC applies, the horizontal and vertical extent of the contaminants of concern above the applicable remediation objectives for soil or groundwater or both, and the nature, location of the source, and direction of movement of the contaminants of concern, as required under 35 Ill. Adm. Code 742.

Section Two. Property Owner represents and warrants **he/she** is the current owner of the Property and has the authority to record this ELUC on the chain of title for the Property with the Office of the Recorder or Registrar of Titles in _____ County, Illinois.

Section Three. The Property Owner hereby agrees, for **himself/herself**, and **his/her** heirs, grantees, successors, assigns, transferees and any other owner, occupant, lessee, possessor or user of the Property or the holder of any portion thereof or interest therein, that [**INSERT RESTRICTION (e.g. the groundwater under the Property shall not be used as a potable supply of water, and any contaminated groundwater or soil that is removed, excavated, or disturbed from the Property described in Exhibit A herein must be handled in accordance with all applicable laws and regulations**)].

Section Four. This ELUC is binding on the Property Owner, **his/her** heirs, grantees, successors, assigns, transferees and any other owner, occupant, lessee, possessor or user of the Property or the holder of any portion thereof or interest therein. This ELUC shall apply in perpetuity against the Property and shall not be released until the IEPA determines there is no longer a need for this ELUC as an institutional control; until the IEPA, upon written request, issues a new No Further Remediation determination approving modification or removal of the limitation(s) or requirement(s); and until a release or modification of the land use limitation or requirement is filed on the chain of title for the Property.

Section Five. Information regarding the remediation performed on the Property may be obtained from the IEPA through a request under the Freedom of Information Act (5 ILCS 140) and rules promulgated thereunder by providing the IEPA with the [10-digit LPC or identification number] listed above.

Section Six. The effective date of this ELUC shall be the date that it is officially recorded in the chain of title for the Property to which the ELUC applies.

WITNESS the following signatures:

Property Owner(s)

By:_____ _____

Its:_____ _____

Date:_____ _____

STATE OF ILLINOIS)
) SS:
COUNTY OF)

I, _____ the undersigned, a Notary Public for said County and State, DO HEREBY CERTIFY, that _____ and _____, personally known to me to be the Property Owner(s) of _____, and personally known to me to be the same persons whose names are subscribed to the foregoing instrument, appeared before me this day in person and severally acknowledged that in said capacities they signed and delivered the said instrument as their free and voluntary act for the uses and purposes therein set forth.

Given under my hand and official seal, this _____ day of _____, 20__.

_____
Notary Public

State of _____)
)S.S.
County of _____)

I, _____, a notary public, do hereby certify that before me this day in person appeared _____, personally known to me to be the Property Owner(s), of _____, each severally acknowledged that they signed and delivered the foregoing instrument as the Property Owner(s) herein set forth, and as their own free and voluntary act, for the uses and purposes herein set forth.

Given under my hand and seal this _____ day of _____, 20__.

_____
Notary Public

PIN NO. XX-XX-XXX-XXX-XXXX
(Parcel Index Number)

Exhibit A

The subject property is located in the City of _____, _____ County, State of Illinois, commonly known as _____, _____, Illinois and more particularly described as:
LIST THE COMMON ADDRESS;
LEGAL DESCRIPTION; AND
REAL ESTATE TAX INDEX OR PARCEL #
(PURSUANT TO 742. 1010(D)(2))

PIN NO. XX-XX-XXX-XXX-XXXX

Exhibit B

IN ACCORDANCE WITH SECTION 742.1010(D)(8)(A)-(D), PROVIDE ALL THE FOLLOWING ELEMENTS. ATTACH SEPARATE SHEETS, LABELED AS EXHIBIT B, WHERE NECESSARY.

(A) A scaled map showing the legal boundary of the property to which the ELUC applies.

(B) Scaled maps showing the horizontal and vertical extent of contaminants of concern above the applicable remediation objectives for soil and groundwater to which the ELUC applies.

(C) Scaled maps showing the physical features to which an ELUC applies (e.g., engineered barriers, monitoring wells, caps, etc.).

(D) Scaled maps showing the nature, location of the source, and direction of movement of the contaminants of concern.