UNITED STATES DISTRICT COURT

DISTRICT OF MINNESOTA

		Civil Action Number:
UNITED STATES, PLAINTIFF, and the	)	
STATE OF MINNESOTA, BY THE MINNESOTA POLLUTION CONTROL AGENCY, Plaintiff-Intervenor,	)	CONSENT DECREE
v.	)	
GOPHER STATE ETHANOL L.L.C., Defendant.	)	

TABLE OF CONTENTS

I. JURISDICTION AND VENUE 3

II. APPLICABILITY 4

III. FACTUAL BACKGROUND 4

IV. COMPLIANCE PROGRAM SUMMARY 5

V. COMPLIANCE PROGRAM 8

- A. Installation Of Controls 8
- B. Permitting And Modifications 11
- C. Emission Limits 12
- D. Demonstration Of Compliance 16
- E. Recordkeeping And Reporting 17

VI. CIVIL PENALTY 18

VII. STIPULATED PENALTIES 19

VIII RIGHT OF ENTRY 21

IX. FORCE MAJEURE 22

X. DISPUTE RESOLUTION 25

XI. GENERAL PROVISIONS 26

XII. TERMINATION 31

CONSENT DECREE

WHEREAS, Plaintiff, the United States of America (hereinafter "Plaintiff" or "the United States"), on behalf of the United States Environmental Protection Agency (herein, "EPA"), has filed twelve Complaints in the United States District Court for the District of Minnesota, one against each dry-process ethanol plant in Minnesota;

WHEREAS, in these Complaints Plaintiff alleged that each of the twelve plants, including Defendant, Gopher State Ethanol L.L.C. (herein, "Gopher State" or "Defendant"), commenced construction of a major emitting facility and major modifications of a major emitting facility in violation of the Prevention of Significant Deterioration ("PSD") requirements at Part C of the Clean Air Act (the "Act"), 42 U.S.C. §§ 7470-7492, and the regulations promulgated thereunder at 40 C.F.R. § 52.21 (the "PSD Rules");

WHEREAS, Plaintiff further alleged in these Complaints that each dry-process ethanol plant, including Defendant, commenced construction of an emitting facility or modified an emitting facility without first obtaining the appropriate preconstruction permits and installing the appropriate air pollution control equipment required by 40 C.F.R. § 52.21 and the Minnesota State Implementation Plan ("SIP") approved pursuant to 42 U.S.C. § 7410;

WHEREAS, Plaintiff further alleged in these Complaints that potential air emissions from each dry-process ethanol plant, including Defendant's facility, were underestimated;

WHEREAS, this Consent Decree is being lodged simultaneously with the filing of the Complaint against Defendant;

WHEREAS, the State of Minnesota, through the Minnesota Pollution Control Agency ("MPCA" or "Plaintiff-Intervenor"), has, simultaneously with lodging of this Consent Decree,

filed a Complaint in Intervention in each of the twelve actions commenced by Plaintiff;

WHEREAS, the Complaints in Intervention allege that each dry-process ethanol plant in Minnesota, including Defendant, has been in violation of the Minnesota SIP, by failing to obtain the appropriate pre-construction permits, by failing to accurately measure and report emissions, and by failing to install appropriate pollution control technology, in violation of applicable state laws, including Minnesota Rule ("Minn. R.") 7007.3000;

WHEREAS, Gopher State applied for a minor source permit from MPCA on November 20, 1997, and was issued the permit on April 15, 1998;

WHEREAS, Gopher State is a small facility that began ethanol production in mid-2000, and has produced ethanol in the following quantities:

- 2000 -- 6.8 million gallons;
- 2001 -- 9.8 million gallons;

WHEREAS, on December 11, 2000, Gopher State applied for an amendment to its MPCA permit in order to install a thermal oxidizer to reduce its emissions and odor related to its emissions;

WHEREAS, on February 21, 2001, the MPCA amended Gopher State's permit allowing it to install its thermal oxidizer;

WHEREAS, Gopher State's thermal oxidizer was installed in June, 2000, at a cost of approximately $1.2 million, and has operated since that time;

WHEREAS, Gopher State's thermal oxidizer has reduced the facility's emissions;

WHEREAS, on February 7, 2002, the MPCA met with representatives of the ethanol plants in Minnesota, including Gopher State, to discuss VOC test results, VOC emissions, and

related compliance issues;

WHEREAS, on June 21, 2002, Gopher State executed a letter of commitment to negotiate with EPA and MPCA to resolve potential violations;

WHEREAS, Gopher State has worked cooperatively with EPA and MPCA regarding the alleged violations and voluntarily provided requested information without information requests under Section 114 of the Act, 42 U.S.C. § 7414;

WHEREAS, the Defendant does not admit the violations alleged in the Complaints;

WHEREAS, the United States and Plaintiff-Intervenor (collectively "Plaintiffs"), and the Defendant have agreed that settlement of this action is in the best interest of the parties and in the public interest, and that entry of this Consent Decree without further litigation is the most appropriate means of resolving this matter; and

WHEREAS, Plaintiffs and the Defendant consent to entry of this Consent Decree without trial of any issues;

NOW, THEREFORE, without any admission of fact or law, and without any admission of the violations alleged in the Complaints, it is hereby ORDERED AND DECREED as follows:

I. JURISDICTION AND VENUE

1. The Complaints state a claim upon which relief can be granted against the Defendant under Sections 113 and 167 of the Act, 42 U.S.C. §§ 7413 and 7477, and 28 U.S.C. §1355. This Court has jurisdiction of the subject matter herein and over the parties consenting hereto pursuant to 28 U.S.C. § 1345 and pursuant to Sections 113 and 167 of the Act, 42 U.S.C. §§ 7413 and 7477. Venue is proper under Section 113(b) of the Act, 42 U.S.C. § 7413(b), and under 28 U.S.C. § 1391(b) and (c).

II. APPLICABILITY

2. The provisions of this Consent Decree shall apply to and be binding upon the Plaintiffs, and upon the Defendant, as well as the Defendant's officers, employees, and agents who are charged with implementing the terms of this Consent Decree and the approved Control Technology Plan on behalf of Gopher State, and the Defendant's successors and assigns. Before termination of the Consent Decree, in the event Defendant proposes to sell or transfer its facility (i.e., a plant or mill) subject to this Consent Decree, Gopher State shall advise such proposed purchaser or successor-in-interest in writing of the existence of this Consent Decree, and shall send a copy of such written notification by certified mail, return receipt requested, to the EPA Regional Administrator for the region in which the facility is located before such sale or transfer, if possible, but no later than the closing date of such sale or transfer. The Defendant shall provide a copy of the Consent Decree and the Control Technology Plan required in Paragraph 15 of this Consent Decree to the proposed purchaser or successor-in-interest. In the event the Defendant sells or otherwise assigns any of its right, title, or interest in its facility, prior to termination of the Consent Decree, the conveyance shall not release the Defendant from any obligation imposed by this Consent Decree unless the party to whom the right, title or interest has been transferred agrees in writing to fulfill the obligations of this Consent Decree.

III. FACTUAL BACKGROUND AND APPLICABLE DEFINITIONS

3. (a) Gopher State is a "person" as defined in Section 302(e) of the Act, 42 U.S.C. §7602(e), and the federal and state regulations promulgated pursuant to the Act.

(b) Gopher State owns and operates a plant in St. Paul, Minnesota, for the manufacture of ethanol. Gopher State receives whole corn which is then milled, cooked, and

fermented. After fermentation, the raw product is distilled to produce ethanol. Distillation separates the liquid ethanol from the corn meal, which Gopher State may dry or sell as wet cake for animal feed. The Plaintiffs allege that in the course of these manufacturing activities significant quantities of particulate matter ("PM"), particulate matter at or below 10 microns ("PM_{10}"), carbon monoxide ("CO"), volatile organic compounds ("VOCs"), nitrogen oxides ("NOx") and other pollutants are generated, including hazardous air pollutants ("HAPs") listed under Section 112(b)(1), 42 U.S.C. § 7412(b)(1) of the Act. The primary sources of these emissions are the feed dryers, fermentation units, gas boilers, cooling cyclones, ethanol truck load-out systems, and fugitive dust emissions from facility operations.

(c) Plaintiffs allege that Gopher State's ethanol plant in St. Paul, Minnesota is a "major emitting facility," as defined by Section 169(1) of the Act, 42 U.S.C. § 7479(1), and the federal and state regulations promulgated pursuant to the Act.

(d) Definitions: Unless otherwise defined herein, terms used in this Consent Decree shall have the meaning given to those terms in the Act, and the federal and state regulations promulgated pursuant to the Act.

IV. COMPLIANCE PROGRAM SUMMARY

4. Gopher State shall implement a program of compliance at its ethanol production and distillation facility to attain the emission levels required under this Consent Decree for VOCs, PM, PM_{10}, CO, and NOx. Gopher State's compliance program is summarized below in Paragraphs 5 through 10, and implemented through Paragraphs 15 through 17 and 26 through 28 of this Consent Decree.

5. Gopher State shall control and minimize fugitive particulate matter emissions

from facility operations as set forth in the approved Control Technology Plan required under Part V of this Consent Decree and which is Attachment 1 to this Consent Decree.

6. Gopher State shall demonstrate compliance with the required emission levels on a unit-by-unit basis as set forth in the approved Control Technology Plan.

7. Gopher State shall demonstrate compliance with the emission limits established under this Consent Decree by the use of performance testing, parametric monitoring, recordkeeping and reporting, or initial and periodic compliance testing, where appropriate, as set forth in the approved Control Technology Plan.

8. Gopher State shall maintain records to demonstrate compliance with New Source Performance Standards ("NSPS"), Part 60, Subparts Dc, Kb, and VV, and its fugitive dust management program.

9. Gopher State shall accept source-wide allowable emission caps equivalent to 95 tons per year ("TPY"), for each pollutant, for VOCs, PM, PM_{10}, sulfur dioxide ("SO_2"), NO_X, and CO based on a 12-month rolling sum, rolled monthly, and recorded monthly.

10. Gopher State shall apply for a modification to its federally-enforceable operating permit to incorporate the 95 TPY allowable emission caps and the lower emission limits applicable to each unit as set forth in the approved Control Technology Plan.

11. For the effective period of the Consent Decree, Gopher State shall obtain a federally-enforceable permit prior to beginning construction or operation of any future modification that will result in a significant net emission increase as defined by 40 C.F.R. Part 52, but will not exceed the 95 TPY allowable emission caps. However, the modifications required in Part V Section A ("Installation of Controls and Applicable Emission Limits") and the

approved Control Technology Plan of this Consent Decree and any modification that qualifies under Minnesota Rule 7007.1250 and 7007.1450 subp. 2 are excluded from the requirements of this Paragraph. For purposes of determining whether a modification will result in a significant net emissions increase, Gopher State shall use results from its initial compliance testing required under this Consent Decree and the approved Control Technology Plan to determine its past actual emissions baseline. Gopher State shall include in its application for the federally-enforceable permit, and MPCA shall propose to incorporate in the permit, the 95 TPY allowable emission caps, or a schedule to meet the 95 TPY allowable emission caps, and all emission limits (to the extent unaffected by the permit modification), monitoring and recordkeeping requirements as set forth in the approved Control Technology Plan and this Consent Decree, and Gopher State shall not contest what is contained in its permit application.

12. If, as a result of any future modifications, prior to termination of the Consent Decree, the total limited potential emissions of VOCs, PM, PM_{10}, SO_2, NO_X and CO will exceed the 95 TPY allowable emission caps, then Gopher State shall complete and submit for MPCA approval a source-wide PSD/NSR permit application that includes the approved Control Technology Plan requirements as set forth in this Consent Decree. In this situation, Gopher State shall obtain a PSD/NSR permit prior to beginning construction of the modifications.

13. If Gopher State demonstrates, through results of compliance tests or evidence of operating conditions, that its facility has operated at or below the 95 TPY emission caps for 24 months, the termination section of this Consent Decree may be invoked and the facility shall be treated as a synthetic minor for air permitting requirements. Permit requirements for future modifications will then be governed by applicable state and federal regulations.

14. In any permit application required pursuant to this Consent Decree, Gopher State shall request, and MPCA shall propose, that the emission limits, monitoring and recordkeeping requirements of the approved Control Technology Plan and this Consent Decree be incorporated into any existing or new permit issued to the source as federally-enforceable Title I permit conditions. Such emission limits, monitoring and recordkeeping requirements shall remain applicable to the source unless and until changed through a permit amendment. Gopher State shall not contest what is contained in its permit application. Requirements under this Consent Decree that are excluded as Title I conditions under this Paragraph are NSPS Subparts Dc, Kb, and VV, and the fugitive emission control program referenced in Paragraphs 15(j) and (e), respectively. In addition, the Consent Decree shall be referenced in the permit as the legal basis for all applicable requirements created by the Consent Decree.

V. COMPLIANCE PROGRAM REQUIREMENTS

A. Installation Of Controls And Applicable Emission Limits

15. Gopher State shall implement a plan for the installation of air pollution control technology ("Control Technology Plan") capable of meeting the following emission level reductions for the identified units in subparagraphs (a) through (j). Gopher State's Control Technology Plan, which has been approved by Plaintiffs, is Attachment 1 to this Consent Decree:

> (a) Feed Dryers: 95 percent reduction of VOC or emissions no higher than 10 parts per million ("PPM") of VOC, 90 percent reduction of CO emissions or emissions no higher than 100 PPM CO, and reduction of PM and PM_{10} based on operation of pollution control technology specified in the approved Control Technology Plan and as established after initial performance testing pursuant to Paragraph 24 of this Consent Decree. A NO_X emission factor shall be established after initial performance testing required pursuant to Paragraph 23 of this Consent Decree. The emission

factor will be used to determine compliance with Paragraph 15(g). The following unit is subject to these limits: EU 050

(b) Fermentation Units: 95 percent reduction of VOC or, if inlet is less than 200 PPM of VOC, then 20 PPM or lower of VOC. The following units are subject to this limit: EU 022-023, EU 030

(c) Gas Boilers: A NOx emission factor shall be established after initial performance testing required pursuant to Paragraph 23 of this Consent Decree, or approved AP-42 factors may be used. The emission factor will be used to determine compliance with Paragraph 15(g). The following units are subject to these limits: EU 001, EU 002

(d) Cooling Cyclones: VOC emission limit(s) shall be established pursuant to Paragraph 22 of this Consent Decree. The following unit is subject to this limit: EU 055

(e) Fugitive Dust Control PM: A program shall be developed for minimization of fugitive dust emissions from facility operations. The following area is subject to this program: FS 001

(f) Ethanol Loadout:
Truck loadout: 95 percent reduction of VOC.
Railcar loadout: All railcars shall be dedicated as ethanol only.
The following unit is subject to this limit: FS 003

(g) Additional Requirements for NOx Emission Units: Establish a Group NOx limit based on 0.04 lbs of NOx per unit, per MMBtu at capacity. An adjustment for propane usage may be made for a designated period of time based on a limit of 0.08 lbs of NOx per MMBtu. Emission factors for each unit in this group shall be established during the initial performance test required in Paragraph 23 of this Consent Decree and will be used to calculate compliance with the Group NOx limit, based on actual fuel usage for all emission units in this group. The fuel used by this group as a whole shall not allow NOx emissions in excess of the Group NOx limit. The following units are subject to this limit: EU 050, EU 001-002, CE 010

(h) Fugitive VOC: Implement and comply with the requirements of 40 C.F.R. Part 60, Subpart VV. The following unit is subject to these requirements: FS 004

(i) Additional Requirements for Hazardous Air Pollutants ("HAPs"): Beginning no later than 180 days following the start-up of the

last piece of control equipment required in the approved Control Technology Plan, Gopher State shall continually operate its facility so as not to exceed source-wide allowable emissions of 9.0 TPY for any single HAP or 24.0 TPY for all HAPs based on a 12-month rolling sum, rolled monthly, and recorded monthly. For the first eleven months, beginning no later than 180 days following start-up of the last piece of control equipment required in the approved Control Technology Plan, compliance with the 12-month rolling sum will be demonstrated based on the schedule to meet applicable emission caps as set forth in the approved Control Technology Plan. If, based on emissions testing as set forth in the approved Control Technology Plan, additional control measures are required to meet the 9.0 or 24.0 TPY emission caps, such control measures shall be implemented and included in the operating permit application required under Paragraph 17.

(j) New Source Performance Standards (NSPS): Identify and implement applicable NSPS requirements codified at 40 C.F.R. Part 60. The following NSPS apply: NSPS subpart Dc (Small Industrial Commercial-Institutional Steam Generating Units less than 29 MW (100 million BTu/hour)); NSPS subpart Kb (Volatile Organic Liquid Storage Vessels); and NSPS subpart VV (Synthetic Organic Chemicals Manufacturing Industry Leak Detection, Monitoring and Repair Requirements).

16. Gopher State shall implement the approved Control Technology Plan in accordance with the schedule set forth in that plan. Gopher State's approved Control Technology Plan is incorporated by reference herein and made directly enforceable by Plaintiffs under this Consent Decree.

B. Permitting And Modifications

17. Source-wide Permit: By no later than 180 days following the start-up of the last piece of control equipment required in the approved Control Technology Plan, Gopher State shall apply for a modification to its federally-enforceable operating permit(s) to incorporate the 95 TPY source-wide allowable emission caps described in Paragraph 9. Gopher State may submit its reissuance application for Air Emission Permit No 12300019-003 as part of the

application required in this Paragraph.

18. Future Modifications: During the period that Gopher State is subject to this Consent Decree, Gopher State shall obtain a federally-enforceable permit prior to beginning construction or operation of any future modification that will result in a significant net emission increase as defined by 40 C.F.R. Part 52, but will not exceed the 95 TPY allowable emission caps. However, the modifications required in Part V Section A ("Installation of Controls and Applicable Emission Limits") and the approved Control Technology Plan of this Consent Decree and any modification that qualifies under Minnesota Rule 7007.1250 and 7007.1450 subp. 2 are excluded from the requirements of this Paragraph. This permit shall incorporate the 95 TPY allowable emission caps, or a schedule to meet the 95 TPY allowable emission caps, as well as the emission limits (to the extent unaffected by the permit modification), and monitoring and recordkeeping requirements as set forth in the approved Control Technology Plan and this Consent Decree, including the requirements establishing the emission level reductions within the Control Technology Plan.

19. In determining whether a future modification will result in a significant net emissions increase, Gopher State cannot take credit for any emission reductions resulting from the implementation of the approved Control Technology Plan for netting purposes as defined by 40 C.F.R. § 52.21(b)(3). In addition, the emission reductions of PM, PM_{10}, NOx, SO_2 and CO required under this Consent Decree and the applicable NSPS may not be used for any emissions offset, banking, selling or trading program. VOC emissions reductions up to 98 percent of the uncontrolled feed dryer emissions may not be used for any emissions offset, banking, selling or trading program.

20. Gopher State shall obtain a PSD permit prior to beginning construction of any future modifications during the effective period of the Consent Decree that will cause any increase in its limited potential emissions of any pollutant regulated under the Act above the 95 TPY source-wide caps, or prior to relaxation of a federally-enforceable permit limit pursuant to 40 C.F.R. § 52.21(r)(4).

C. Emission Limits

21. Unit Emission Limit for VOC, CO, NOx:

Beginning no later than 180 days following the start-up of each piece of control equipment required in its approved Control Technology Plan, Gopher State shall continually operate each unit in accordance with the operating parameters set forth in the approved Control Technology Plan.

22. VOC Limit for Cooling Cyclone:

(a) By no later than 18 months following the lodging of this Consent Decree, Gopher State shall submit to MPCA a written evaluation of the technical feasibility and cost effectiveness of additional VOC control equipment for the cooling cyclone and the technical feasibility and cost effectiveness of either directly or indirectly routing the cooling cyclone emissions to feed dryer control equipment. The evaluation shall include consideration of Gopher State's current cooling cyclone emissions and/or testing conducted on cooling cyclones at other ethanol plants.

(1) If the evaluation demonstrates that additional controls or routing the emission to the feed dryer control equipment are technically feasible and cost effective, a schedule to install the controls and interim VOC emission limit(s) to apply until controls are

installed must be included in the evaluation.

(2) If Gopher State concludes that additional controls are not technically feasible and cost effective, Gopher State shall propose a VOC emission limit(s) based on the data collected from initial performance testing and other available pertinent information.

(b) Gopher State shall immediately comply with the proposed VOC emission limit(s) or interim VOC emission limit(s) that it proposes pursuant to Paragraph 22(a)(1) or 22(a)(2) above.

(c) MPCA will use the data collected, the control equipment evaluation and other available pertinent information to establish a VOC emission limit(s) for the cooling cyclone and, if necessary, the required emissions control, or to support a determination that additional controls are not technically feasible or cost-effective. MPCA shall provide written notice to Gopher State of the established limit, or the additional required controls, and MPCA's notice shall be incorporated into and enforceable under this Consent Decree.

(1) If the limit established by the MPCA is more stringent than the limit proposed by Gopher State, Gopher State shall have 30 days from the date of the written notice to comply with the established limit(s).

(2) If MPCA determines that controls are required in addition to, or different from, those proposed by Gopher State, Gopher State shall have 30 days from the date of the written notice to provide MPCA with a schedule to install the controls. The MPCA shall allow Gopher State a reasonable time to install the required controls. If Gopher State contests the MPCA's proposed limit or MPCA's proposed controls, Gopher State shall have 60 days to invoke the Dispute Resolution process pursuant to Part X ("Dispute Resolution") and obtain a

stay from the Court. Until a limit is established under the Dispute Resolution process herein, Gopher State shall comply with the emission limit(s) it proposed under Paragraph 22(a)(2).

23. NOx Emission Factors: Following the initial performance test as required in Paragraphs 15 (a), (c), and (g) and 28, Gopher State shall establish unit specific NO_X emission factors that it will use to calculate actual NO_X emissions to demonstrate compliance with Paragraph 15(g). The method to determine compliance with the limit in Paragraph 15(g) is specified in the approved Control Technology Plan.

24. Unit Emission Limit for PM and PM_{10}: By no later than 45 days following the initial performance test of the control equipment for the feed dryer as required in Paragraphs 15(a) and 28, Gopher State shall propose PM and PM_{10} emission limits based on the data collected from initial performance testing and other available pertinent information. Gopher State shall immediately comply with the proposed emission limit. MPCA will use the data collected and other available pertinent information to establish limits for PM and PM_{10}. MPCA shall provide written notice to Gopher State of the established limit and the established limit shall be incorporated into and enforceable under this Consent Decree. If Gopher State contests the MPCA's proposed limit, Gopher State shall have 60 days to invoke the Dispute Resolution process pursuant to Part X ("Dispute Resolution") and obtain a stay from the Court. Until a limit is established under the Dispute Resolution process herein, Gopher State shall comply with the emission limit(s) it proposed under this Paragraph.

25. Unit Operating Permits: By no later than 180 days following start-up of the last piece of control equipment required in its approved Control Technology Plan, Gopher State shall apply for modification to its federally-enforceable operating permit to incorporate the emission

limits, monitoring parameters, and recordkeeping set forth in the approved Control Technology Plan and this Consent Decree.

26. Source-wide Caps:

(a) Beginning no later than 180 days following start-up of the last piece of control equipment required in its approved Control Technology Plan, Gopher State shall continually operate its facility so as not to exceed the source-wide allowable emission caps of 95 TPY for each pollutant for VOCs, PM, PM_{10}, SO_2, NO_X, and CO based on a 12-month rolling sum, rolled monthly, and recorded monthly. For the first eleven months, beginning no later than 180 days following start-up of the last piece of control equipment required in the approved Control Technology Plan, compliance with the 12-month rolling sum will be demonstrated based on a schedule to meet applicable emission caps as set forth in the approved Control Technology Plan. This provision shall survive termination of this Consent Decree until the 95 TPY emission caps are amended by or incorporated into a federally-enforceable permit for the facility.

(b) Beginning no later than 180 days following start-up of the last piece of control equipment required in its approved Control Technology Plan, Gopher State shall continually operate its facility so as not to exceed the source-wide allowable emission caps of 9.0 TPY for any single hazardous air pollutant or 24.0 TPY for all hazardous air pollutants based on a 12-month rolling sum, rolled monthly, and recorded monthly. For the first eleven months, beginning no later than 180 days following start-up of the last piece of control equipment required in the approved Control Technology Plan, compliance with the 12-month rolling sum will be demonstrated based on a schedule to meet applicable emission caps as set forth in the approved Control Technology Plan. This provision shall survive termination of this Consent

Decree until the 9.0 TPY and 24.0 TPY emission caps are amended by or incorporated into a federally-enforceable permit for the facility.

D. Demonstration Of Compliance

27. Gopher State shall demonstrate continuous compliance with the emission limits established under this Consent Decree by the use of parametric monitoring, recordkeeping and reporting, as set forth in the approved Control Technology Plan.

28. By no later than 180 days following the start-up of the last piece of control equipment required in the approved Control Technology Plan, Gopher State shall demonstrate through emissions testing of each emissions unit as specified in the approved Control Technology Plan, conducted in accordance with MPCA and U.S. EPA approved test protocol, that it has met the required destruction efficiency and/or emission limits. Gopher State shall follow all testing requirements in Minnesota Rule 7017. Gopher State shall retest the dryer for VOCs, CO, PM, and PM_{10} no less than annually for the effective period of the Consent Decree. Gopher State shall retest all other units in accordance with MPCA's policy regarding performance testing frequency.

29. Gopher State shall maintain control technology performance criteria monitoring data and records as set forth in the approved Control Technology Plan, and shall make them available to the Plaintiffs upon demand as soon as practicable.

E. Recordkeeping And Reporting Requirements

30. Beginning with the first full calendar quarter following lodging of this Consent Decree, Gopher State shall submit written reports within 30 days following each calendar quarter to MPCA and U.S. EPA that itemize Consent Decree requirements and the approved Control

Technology Plan requirements, the applicable deadlines, the dates the tasks were completed, unit emissions data and data to support Gopher State's compliance status with the terms of this Consent Decree. Reports shall be sent to the addresses identified in Paragraph 64 ("Notice"). Emissions data may be submitted in electronic format.

31. Gopher State shall preserve and retain all records and documents now in its possession or control, or which come into its possession or control, that support the reporting and compliance requirements under this Part for a period of three years following the termination of this Consent Decree, unless other regulations require the records to be maintained longer.

32. All notices, reports or any other submissions from Gopher State shall contain the following certification and may be signed by an owner or operator of the company responsible for environmental management and compliance:

> "I certify under penalty of law that I have personally examined the information submitted herein and that I have made a diligent inquiry of those individuals immediately responsible for obtaining the information and that to the best of my knowledge and belief, the information submitted herewith is true, accurate, and complete. I am aware that there are significant penalties for submitting false information, including the possibility of fine and imprisonment."

VI. CIVIL PENALTY

33. Within thirty (30) calendar days of entry of this Consent Decree, the Defendant shall pay to the Plaintiffs a civil penalty pursuant to Section 113 of the Act, 42 U.S.C. § 7413, in the amount of $18,904 (Eighteen Thousand Nine Hundred and Four Dollars). Pursuant to the Act, the following factors were considered in determining a civil penalty, in addition to other factors as justice may require: the size of the business, the economic impact of the penalty on the business, the violator's full compliance history and good faith efforts to comply, the duration of

the violation, payment by the violator of penalties previously assessed for the same violation, the economic benefit of noncompliance, and the seriousness of the violation.

34. Of the total penalty, $9,452, shall be paid to the United States by Electronic Funds Transfer ("EFT") to the United States Department of Justice, in accordance with current EFT procedures, referencing the USAO File Number and DOJ Case Number 90-5-2-1-07784, and the civil action case name and case number of the District of Minnesota. The costs of such EFT shall be Gopher State's responsibility. Payment shall be made in accordance with instructions provided to Gopher State by the Financial Litigation Unit of the U.S. Attorney's Office in the District of Minnesota. Any funds received after 11:00 a.m. (EST) shall be credited on the next business day. Gopher State shall provide notice of payment, referencing the USAO File Number and DOJ Case Number 90-5-2-1-07784, and the civil action case name and case number, to the Department of Justice and to EPA, as provided in Paragraph 64 ("Notice"). The total remaining amount, $9,452 in civil penalties, shall be paid to the Plaintiff-Intervenor the State of Minnesota, made in the form of a certified check payable to the Minnesota Pollution Control Agency and delivered to:

Enforcement Penalty Coordinator
Minnesota Pollution Control Agency
520 Lafayette Road
St. Paul, Minnesota 55155-4194

35. The Defendant shall pay statutory interest on any overdue civil penalty or stipulated penalty amount at the rate specified in 31 U.S.C. § 3717. Upon entry of this Consent Decree, this Consent Decree shall constitute an enforceable judgment for purposes of post-judgment collection in accordance with Rule 69 of the Federal Rules of Civil Procedure, the Federal Debt Collection Procedure Act, 28 U.S.C. § 3001-3308, Minnesota Statute Chapter 16D

and other applicable federal and state authority. The Plaintiffs shall be deemed a judgment creditor for purposes of collection of any unpaid amounts of the civil and stipulated penalties and interest.

36. No portion of the $18,904 civil penalty to be paid by Gopher State shall be used to reduce its federal or state tax obligations.

VII. STIPULATED PENALTIES

37. The Defendant shall pay stipulated penalties in the amounts set forth below to the Plaintiffs, to be paid 50 percent to the United States and 50 percent to the Plaintiff-Intervenor, for the following:

(a) for each day of failure to propose PM, PM_{10}, and VOC emissions limits under Paragraphs 22 and 24:

1st through 30th day after deadline	$ 250
31st through 60th day after deadline	$ 500
Beyond the 60th day	$1000

(b) for each day of failure to meet the deadlines for installation of control technology systems set forth in the Control Technology Plan and applying for, or obtaining, permits under Paragraphs 17, 18, 20, and 25:

1st through 30th day after deadline	$ 800
31st through 60th day after deadline	$1,200
Beyond 60th day	$2,000

(c) for failure to conduct a compliance test as required by Paragraph 28, per day per unit:

1st through 30th day after deadline	$250
31st through 60th day after deadline	$500
Beyond 60th day	$1,000

(d) for failure to demonstrate compliance with emission limits set forth in the approved Control Technology Plan or emission limits set pursuant to Part V Section C ("Emission Limits"): $5000 per emissions test for each pollutant

(e) for each failure to submit reports or studies as required by Part V Section E ("Recordkeeping and Reporting Requirements") of this Consent Decree, per day per report or notice:

1st through 30th day after deadline	$ 250
31st through 60th day after deadline	$ 500
Beyond 60th day	$1,000

(f) for failure to pay or escrow stipulated penalties, as specified in Paragraphs 38 and 39 of this section, $500 per day per penalty demand.

(g) for failure to notify the Plaintiffs pursuant to Paragraph 2 of Gopher State's sale or transfer of the facility, $250 per day.

38. Gopher State shall pay stipulated penalties upon written demand by the Plaintiffs no later than thirty (30) days after Defendant receives such demand. Stipulated penalties shall be paid to the Plaintiffs in the manner set forth in Part VI ("Civil Penalty") of this Consent Decree.

39. Should Gopher State dispute its obligation to pay part or all of a stipulated penalty, it may avoid the imposition of the stipulated penalty for failure to pay a penalty due to the Plaintiffs by placing the disputed amount demanded by the Plaintiffs, not to exceed $20,000

for any given event or related series of events at any one plant, in a commercial escrow account pending resolution of the matter and by invoking the Dispute Resolution provisions of Part X within the time provided in Paragraph 38 for payment of stipulated penalties. If the dispute is thereafter resolved in Defendant's favor, the escrowed amount plus accrued interest shall be returned to the Defendant. Otherwise the Plaintiffs shall be entitled to the escrowed amount that was determined to be due by the Court plus the interest that has accrued on such amount, with the balance, if any, returned to the Defendant.

40. The Plaintiffs reserve the right to pursue any other remedies for violations of this Consent Decree to which they are entitled. The Plaintiffs will not seek stipulated penalties and civil or administrative penalties for the same violation of the Consent Decree.

VIII. RIGHT OF ENTRY

41. Any authorized representative of the EPA or MPCA, or an appropriate federal or state agency, including independent contractors, upon presentation of proper credentials and in compliance with the facility's safety requirements, shall have a right of entry upon the premises of Gopher State's plant identified herein at Paragraph 3(b) at any reasonable time for the purpose of monitoring compliance with the provisions of this Consent Decree, including inspecting plant equipment, and inspecting and copying all records maintained by Defendant required by this Consent Decree. Nothing in this Consent Decree shall limit the authority of EPA and MPCA to conduct tests and inspections under Section 114 of the Act, 42 U.S.C. § 7414, and Minnesota Statute §§ 15.04 and 116.091 or any other applicable law.

IX. FORCE MAJEURE

42. If any event occurs which causes or may cause a delay or impediment to performance in complying with any provision of this Consent Decree, Defendant shall notify the Plaintiffs in writing as soon as practicable, but in any event within twenty (20) business days of when Defendant first knew of the event or should have known of the event by the exercise of due diligence. In this notice Defendant shall specifically reference this Paragraph of this Consent Decree and describe the anticipated length of time the delay may persist, the cause or causes of the delay, and the measures taken or to be taken by Defendant to prevent or minimize the delay and the schedule by which those measures will be implemented. Defendant shall adopt all reasonable measures to avoid or minimize such delays.

43. Failure by Defendant to provide notice to Plaintiffs of an event which causes or may cause a delay or impediment to performance may render this Part IX voidable by the Plaintiffs as to the specific event for which the Defendant has failed to comply with such notice requirement, and, if voided, is of no effect as to the particular event involved.

44. The United States or MPCA shall notify the Defendant in writing regarding the Defendant's claim of a delay or impediment to performance as soon as practicable, but in any event within thirty (30) days of receipt of the Force Majeure notice provided under Paragraph 42. If the Plaintiffs agree that the delay or impediment to performance has been or will be caused by circumstances beyond the control of the Defendant, including any entity controlled by the Defendant, and that the Defendant could not have prevented the delay by the exercise of due diligence, the parties shall stipulate to an extension of the required deadline(s) for all requirement(s) affected by the delay by a period equivalent to the delay actually caused by such

circumstances. The Defendant shall not be liable for stipulated penalties for the period of any such delay.

45. If the Plaintiffs do not accept the Defendant's claim that a delay or impediment to performance is caused by a force majeure event, to avoid payment of stipulated penalties, the Defendant must submit the matter to this Court for resolution within twenty (20) business days after receiving notice of the Plaintiffs' position, by filing a petition for determination with this Court. Once the Defendant has submitted this matter to this Court, the Plaintiffs shall have twenty (20) business days to file its response to said petition. If the Defendant submits the matter to this Court for resolution and the Court determines that the delay or impediment to performance has been or will be caused by circumstances beyond the control of the Defendant, including any entity controlled by the Defendant, and that the Defendant could not have prevented the delay by the exercise of due diligence, the Defendant shall be excused as to that event(s) and delay (including stipulated penalties), for a period of time equivalent to the delay caused by such circumstances.

46. The Defendant shall bear the burden of proving that any delay of any requirement(s) of this Consent Decree was caused by or will be caused by circumstances beyond its control, including any entity controlled by it, and that the Defendant could not have prevented the delay by the exercise of due diligence. The Defendant shall also bear the burden of proving the duration and extent of any delay(s) attributable to such circumstances. An extension of one compliance date based on a particular event may, but does not necessarily, result in an extension of a subsequent compliance date or dates.

47. Unanticipated or increased costs or expenses associated with the performance of

the Defendant's obligations under this Consent Decree shall not constitute circumstances beyond the control of the Defendant, or serve as a basis for an extension of time under this Part. However, failure of a permitting authority to issue a necessary permit in a timely fashion is an event of Force Majeure where the Defendant has taken all steps available to it to obtain the necessary permit including but not limited to:

(a) submitting a timely and complete permit application;

(b) responding to requests for additional information by the permitting authority in a timely fashion; and

(c) prosecuting appeals of any disputed terms and conditions imposed by the permitting authority in an expeditious fashion.

48. Notwithstanding any other provision of this Consent Decree, this Court shall not draw any inferences nor establish any presumptions adverse to either party as a result of Defendant delivering a notice of Force Majeure or the parties' inability to reach agreement.

49. As part of the resolution of any matter submitted to this Court under this Part IX, the parties by agreement, or this Court, by order, may in appropriate circumstances extend or modify the schedule for completion of work under this Consent Decree to account for the delay in the work that occurred as a result of any delay or impediment to performance agreed to by the Plaintiffs or approved by this Court. Defendant shall be liable for stipulated penalties for its failure thereafter to complete the work in accordance with the extended or modified schedule.

X. DISPUTE RESOLUTION

50. The dispute resolution procedure provided by this Part X shall be available to resolve all disputes arising under this Consent Decree, including but not limited to emission

limits established by the MPCA in Part V Section C ("Emission Limits"), except as otherwise provided in Part IX regarding Force Majeure.

51. The dispute resolution procedure required herein shall be invoked upon the giving of written notice by one of the parties to this Consent Decree to another advising of a dispute pursuant to this Part X. The notice shall describe the nature of the dispute, and shall state the noticing party's position with regard to such dispute. The party receiving such a notice shall acknowledge receipt of the notice and the parties shall expeditiously schedule a meeting to discuss the dispute informally not later than fourteen (14) days from the receipt of such notice.

52. Disputes submitted to dispute resolution shall, in the first instance, be the subject of informal negotiations between the parties. Such period of informal negotiations shall not extend beyond thirty (30) calendar days from the date of the first meeting between representatives of the Plaintiffs and the Defendant, unless the parties' representatives agree to shorten or extend this period.

53. In the event that the parties are unable to reach agreement during such informal negotiation period, the Plaintiffs shall provide the Defendant with a written summary of their position regarding the dispute. The position advanced by the Plaintiffs shall be considered binding unless, within forty-five (45) calendar days of the Defendant's receipt of the written summary of the Plaintiffs position, the Defendant files with this Court a petition which describes the nature of the dispute, and includes a statement of the Defendant's position and any supporting data, analysis, and/or documentation relied on by the Defendant. The Plaintiffs shall respond to the petition within forty-five (45) calendar days of filing.

54. Where the nature of the dispute is such that a more timely resolution of the issue

is required, the time periods set out in this Part X may be shortened upon motion of one of the parties to the dispute.

55. Notwithstanding any other provision of this Consent Decree, in dispute resolution, this Court shall not draw any inferences nor establish any presumptions adverse to either party as a result of invocation of this Part X or the parties' inability to reach agreement. The final position of the Plaintiffs shall be upheld by the Court if supported by substantial evidence in the record as identified and agreed to by all the Parties.

56. As part of the resolution of any dispute submitted to dispute resolution, the parties, by agreement, or this Court, by order, may, in appropriate circumstances, extend or modify the schedule for completion of work under this Consent Decree to account for the delay in the work that occurred as a result of dispute resolution. Defendant shall be liable for stipulated penalties for its failure thereafter to complete the work in accordance with the extended or modified schedule.

XI. GENERAL PROVISIONS

57. Effect of Settlement. This Consent Decree is not a permit; compliance with its terms does not guarantee compliance with any applicable federal, state or local laws or regulations. To the extent that the terms of this Consent Decree conflict with the terms of any air quality permit, the terms of this Consent Decree shall control during the effective period of the Consent Decree.

58. Resolution of Claims. Satisfaction of all of the requirements of this Consent Decree constitutes full settlement of and shall resolve all past civil and administrative liability of the Defendant to the Plaintiffs for the violations alleged in the United States' and Plaintiff-

Intervenor's Complaints and all civil and administrative liability of the Defendant for any violations at its facility based on facts and events that occurred during the relevant time period under the following statutory and regulatory provisions: (a) NSPS, 40 C.F.R. Part 60, including subparts Dc, Kb, and VV; (b) National Emission Standards for Hazardous Air Pollutants, 40 C.F.R. Part 63, pursuant to Sections 112(d) and 112(g) of the Act; (c) PSD requirements at Part C of the Act and the regulations promulgated thereunder at 40 C.F.R. § 52.21, and the Minnesota regulations which incorporate and/or implement the above-listed federal regulations in items (a) through (c); (d) all air permit requirements under Minn. R. 7007.0050-7007.1850; (e) air emissions fee requirements under Minn. R. 7002.0025-7002.0095; (f) performance standards for stationary sources under Minn. R. 7011.0010-7011.9990, and performance tests under Minn. R. 7017.2001-7017.2060; (g) notification, recordkeeping and reporting requirements under Minn. R. 7019.0100-7019.2000; and (h) emission inventory requirements under Minn. R. 7019.3000-7019.3100. For purposes of this Consent Decree, the "relevant time period" shall mean the period beginning when the United States' claims and/or Plaintiff-Intervenor's claims under the above statutes and regulations accrued through the date of entry of this Consent Decree. During the effective period of the Consent Decree, certain emission units shall be on a compliance schedule and any modification to these units, as defined in 40 C.F.R. § 52.21, which is not required by this Consent Decree is beyond the scope of this resolution of claims. This provision shall survive the termination of the Consent Decree.

59. Other Laws. Except as specifically provided by this Consent Decree, nothing in this Consent Decree shall relieve Defendant of its obligation to comply with all applicable federal, state and local laws and regulations. Subject to Paragraphs 40 and 58, nothing contained

in this Consent Decree shall be construed to prevent or limit the United States' or MPCA's rights to obtain penalties or injunctive relief under the Act or other federal, state or local statutes or regulations, including but not limited to, Section 303 of the Act, 42 U.S.C. § 7603.

60. Third Parties. Except as otherwise provided by law, this Consent Decree does not limit, enlarge or affect the rights of any party to this Consent Decree as against any third parties. Nothing in this Consent Decree should be construed to create any rights, or grant any cause of action, to any person not a party to this Consent Decree.

61. Costs. Each party to this Consent Decree shall bear its own costs and attorneys' fees through the date of entry of this Consent Decree.

62. Public Documents. All information and documents submitted by the Defendant to the Plaintiffs pursuant to this Consent Decree shall be subject to public inspection, unless subject to legal privileges or protection or identified and supported as business confidential by the Defendant in accordance with 40 C.F.R. Part 2 and Minnesota Statute §§ 13.37 and 116.075.

63. Public Comments - Federal Approval. The parties agree and acknowledge that final approval by the United States and entry of this Consent Decree is subject to the requirements of 28 C.F.R. § 50.7, which provides for notice of the lodging of this Consent Decree in the Federal Register, an opportunity for public comment, and consideration of any comments. The United States reserves the right to withdraw or withhold consent if the comments regarding this Consent Decree discloses facts or considerations which indicate that this Consent Decree is inappropriate, improper or inadequate. The Defendant and the Plaintiff-Intervenor consent to the entry of this Consent Decree.

64. Notice. Unless otherwise provided herein, notifications to or communications

with the United States, EPA, MPCA or the Defendant shall be deemed submitted on the date they are postmarked and sent either by overnight receipt mail service or by certified or registered mail, return receipt requested. Except as otherwise provided herein, when written notification to or communication with the United States, EPA, MPCA or the Defendant is required by the terms of this Consent Decree, it shall be addressed as follows:

As to the United States:

Thomas L. Sansonetti
Assistant Attorney General
Environmental Enforcement Section
Environment and Natural Resources Division
U.S. Department of Justice
P.O. Box 7611, Ben Franklin Station
Washington, DC 20044-7611

As to the U.S. EPA:

Bruce Buckheit
Director, Air Enforcement Division
U.S. Environmental Protection Agency
Ariel Rios Building
1200 Pennsylvania Avenue, N.W.
Mail Code 2242-A
Washington, DC 20004

and the EPA Regional office for the region in which the facility is located:

Region 5:

Cynthia A. King
U.S. EPA, Region 5
C-14J
77 W. Jackson Blvd.
Chicago, IL 60604

Compliance Tracker
Air Enforcement Branch, AE-17J
U.S. EPA, Region 5
77 W. Jackson Blvd.

Chicago, IL 60604

As to Gopher State Ethanol:

James F. Freeman, III
Gopher State Ethanol
882 West Seventh Street
St. Paul, MN 55102

and

(Counsel for Gopher State)

Carolyn V. Wolski
Leonard, Street and Deinard
150 South Fifth Street
Suite 2300
Minneapolis, MN 55402

As to Plaintiff-Intervenor the State of Minnesota, through the MPCA:

Rhonda Land
Minnesota Pollution Control Agency
520 Lafayette Road N
St. Paul, MN 55155-4194

Leah M.P. Hedman
Office of the Attorney General
NCL Towers Suite 900
445 Minnesota Street
St. Paul, MN 55101-2127

65. Change of Notice Recipient. Any party may change either the notice recipient or the address for providing notices to it by serving all other parties with a notice setting forth such new notice recipient or address.

66. Modification. There shall be no modification of this Consent Decree without written agreement of all the parties. There shall be no material modification of this Consent Decree without the written agreement of the parties and Order of the Court. Prior to complete

termination of the requirements of this Consent Decree pursuant to Paragraph 68, the parties may, upon motion to the Court, seek to terminate provisions of this Consent Decree.

67. Continuing Jurisdiction. The Court retains jurisdiction of this case after entry of this Consent Decree to enforce compliance with the terms and conditions of this Consent Decree and to take any action necessary or appropriate for its interpretation, construction, execution, or modification. During the term of this Consent Decree, any party may apply to the Court for any relief necessary to construe or effectuate this Consent Decree.

XII. TERMINATION

68. This Consent Decree shall be subject to termination upon motion by any party after the Defendant satisfies all requirements of this Consent Decree and has operated the control technologies identified in the approved Control Technology Plan in compliance with emission limits, and has demonstrated for 24 months that its actual emissions of VOCs, PM, PM_{10}, SO_2, NOx and CO have remained at or under 95 TPY. For purposes of meeting the 24-month performance requirement in this Paragraph, Defendant may demonstrate that its actual emissions remained at or under the 95 TPY allowable emission caps by using either the results of its initial compliance tests or evidence of operating conditions since the installation of the control equipment required in this Consent Decree and in the approved Control Technology Plan. At such time that the Defendant seeks termination of this Consent Decree, if the Defendant believes that it is in compliance with the requirements of this Consent Decree, and has paid the civil penalty and any stipulated penalties required by this Consent Decree, then the Defendant shall so certify to the Plaintiffs, and unless the Plaintiffs object in writing with specific reasons within forty-five (45) days of receipt of the certification, the Court shall order that this Consent Decree

be terminated on Defendant's motion. If the United States or MPCA objects to the Defendant's certification, then the matter shall be submitted to the Court for resolution under Part X ("Dispute Resolution") of this Consent Decree. In such case, the Defendant shall bear the burden of proving that this Consent Decree should be terminated.

So entered in accordance with the foregoing this _____day of _____, 2002.

_____
United States District Court Judge
District of Minnesota

FOR PLAINTIFF, UNITED STATES OF AMERICA:

Tom Sansonetti

Date 9.10.02

Thomas L. Sansonetti
Assistant Attorney General
Environment and Natural Resources Division
U.S. Department of Justice
10th & Pennsylvania Avenue, N.W.
Washington, DC 20530

Dianne M. Shawley

Date 8/23/02

Dianne M. Shawley
Senior Counsel
Environment and Natural Resources Division
U.S. Department of Justice
1425 New York Avenue, N.W.
Washington, DC 20005

Date 8/23/02

Cynthia A. King
Special Trial Attorney
US EPA Region 5
77 W. Jackson Street
Chicago, IL 60604

United States Attorney
District of Minnesota

Friedrich A P Siekert Date 10/1/02

THOMAS B. HEFFELFINGER
United States Attorney

BY: FRIEDRICH A. P. SIEKERT
Assistant U.S. Attorney
Attorney ID No. 142013
District of Minnesota
U.S. Courthouse
300 S. 4th Street
Suite 600
Minneapolis, MN 55415

FOR U.S. ENVIRONMENTAL PROTECTION AGENCY:

Date

John Peter Suarez
Assistant Administrator
Office of Enforcement and Compliance Assurance
U.S. Environmental Protection Agency
Ariel Rios Building
1200 Pennsylvania Avenue, N.W.
Washington, DC 20460

FOR U.S. ENVIRONMENTAL PROTECTION AGENCY:

Date 9.20.02

Thomas V. Skinner
Regional Administrator
U.S. Environmental Protection Agency
Region 5
77 West Jackson Street
Chicago, IL 60604

FOR THE PLAINTIFF-INTERVENOR, THE STATE OF MINNESOTA POLLUTION CONTROL AGENCY:

Karen A. Studders

Date 10 October 2002

Commissioner Karen A. Studders
Minnesota Pollution Control Agency
520 Lafayette Road
St. Paul, MN 55155

_____

Date _____

Leah M. P. Hedman
Office of the Attorney General
NCL Towers Suite 900
445 Minnesota Street
St. Paul, MN 55101-2127

FOR DEFENDANT, GOPHER STATE ETHANOL LLC

James F. Freeman III

Date 8/29/02

James F. Freeman, III CEO/COO
Gopher State Ethanol LLC
882 West Seventh Street
St. Paul, MN 55102

Date Sept. 5, 2002

(Counsel for Gopher State)
Carolyn V. Wolski
Leonard, Street and Deinard
Suite 2300
150 South Fifth Street
Minneapolis, MN 55402

Control Technology Plan

For

Gopher State Ethanol

(September 13, 2002)

CONTENTS

1.0 INTRODUCTION 1

2.0 EMISSION UNITS REQUIRING POLLUTION CONTROL EQUIPMENT 2

3.0 ENGINEERING DESIGN CRITERIA FOR POLLUTION CONTROL EQUIPMENT 3

4.0 EMISSION LIMITS FROM POLLUTION CONTROL EQUIPMENT 6

5.0 POLLUTION CONTROL EQUIPMENT INSTALLATION SCHEDULE 11

6.0 MONITORING PARAMETERS FOR POLLUTION CONTROL DEVICES 13

7.0 POLLUTION CONTROL DEVICE PERFORMANCE TEST SCHEDULE AND TEST METHODS 15

8.0 FUGITIVE DUST EMISSION CONTROL PROGRAM 17

1.0 INTRODUCTION

In September, 2002, Gopher State Ethanol, LLC entered into a Consent Decree by which it agreed to implement a program of compliance at the dry-mill (corn) ethanol plant it operates in St. Paul, Minnesota. Gopher State Ethanol prepared and submitted this Control Technology Plan (CTP) as an integral part of the Consent Decree. This CTP fulfills the requirement of the Consent Decree and has been reviewed and approved by the US Environmental Protection Agency (USEPA) and the Minnesota Pollution Control Agency (MPCA) as part of the Consent Decree. This CTP contains:

(a). Identification of all units to be controlled;

(b). Engineering design criteria for all proposed controls capable of meeting the emission levels required by Part V of this Consent Decree;

(c). Proposed short-term and long-term emission limits and controlled outlet concentrations for each pollutant as appropriate;

(d). A schedule for expedited installation with specific milestones applicable on a unit-by-unit basis;

(e). Proposed monitoring parameters for all control equipment and parameter ranges;

(f). Identification of all units to be emission tested under Paragraph 15 of this Consent Decree and a schedule for initial tests and retest;

(g). The test methods that will be used to demonstrate compliance with the emissions levels set forth in this Consent Decree;

(h). Program for minimization of fugitive dust emissions from facility operations.

2.0 EMISSION UNITS REQUIRING POLLUTION CONTROL EQUIPMENT

The following emission units, fugitive sources, and control equipment have been designated as affected units in the Consent Decree and have emission limits requiring pollution control technology.

Unit Designation #	Unit Description	CE#	Control Equipment Description
EU 050	DDGS Dryer	CE002 CE (tbd)	Dryer Cyclones (existing) New Thermal Oxidizer
EU 022 EU 023 EU030	Ethanol Fermenters	CE008 CE (tbd)	Fermentation Scrubber (existing) Pre-scrubber to enhance the existing scrubber.
EU 055	DDGS Cooling	CE006 CE (tbd)	Cooling Cyclone (existing) Additional control equipment possible following analysis per Paragraph 22 of the Consent Decree
FS 003	Ethanol Loading Rack	CE (tbd)	New Separate Thermal Oxidizer (if necessary) If analysis of the cooling cyclone under Paragraph 22 determines that additional VOC control is technically feasible and cost effective, a common thermal oxidizer may be used for the cooling cyclone and ethanol loading rack. The operating parameters would change accordingly.
EU001	Boiler #1	na	na
EU002	Boiler #2	na	na
FS 004	Fugitive VOC Sources	na	LDAR Program
FS 001	Truck Traffic	na	Move wet cake loadout to paved area.

3.0 ENGINEERING DESIGN CRITERIA FOR POLLUTION CONTROL EQUIPMENT

Process Description	Control Device #	Control Device Description	Operating Parameters
DDGS Drying	CE 002	Dryer Cyclones (existing)	2" w.c. < Pressure drop < 8" w.c.
	CE (tbd)	Thermal Oxidizer	Exhaust Flow Rate □ 32,000 scfm Residence Time > 0.7 seconds in combustion chamber Design Fuel Input Rate ~ 78 MMBtu/hr
Ethanol Loading Rack	CE (tbd)	Thermal Oxidizer (exhaust from the ethanol loading rack will either be vented to the new dryer oxidizer or a small separate oxidizer)	Exhaust flow rate = tbd (~100 cfm) Residence Time = tbd (> 0.7 seconds) Design Fuel Input Rate = tbd (oxidizer may be either gas or electric)
Ethanol Fermentation	CE 008	Packed Column Scrubber (existing)	1" w.c. < Pressure drop < 10" w.c. water flow rate ≥ 20 gpm
	CE (tbd)	Pre-scrubber	0" w.c. < Pressure drop < 5" w.c. water flow rate to be determined
Cooling Cyclone	CE 006	Cyclone (existing)	2" w.c. < Pressure drop < 8" w.c.
	CE (tbd)	Additional control equipment possible following analysis per Paragraph 22 of the Consent Decree	
Boiler #1	NA		Design Fuel Input Rate = 38.85 MMBtu/hr (Natural Gas) 210 gal/hr (#6 Fuel Oil) NOx 100 lbs/1,000 ft^3 (AP42-1.4) NOx 55 lbs/1000 gal (AP42-1.3)
Boiler #2	NA		Design Fuel Input Rate = 38.85 MMBtu/hr (Natural Gas) 210 gal/hr (#6 Fuel Oil) NOx 100 lbs/1,000 ft^3 (AP42-1.4) NOx 55 lbs/1000 gal (AP42-1.3)

Note: Operating parameters may be adjusted following emissions compliance tests.

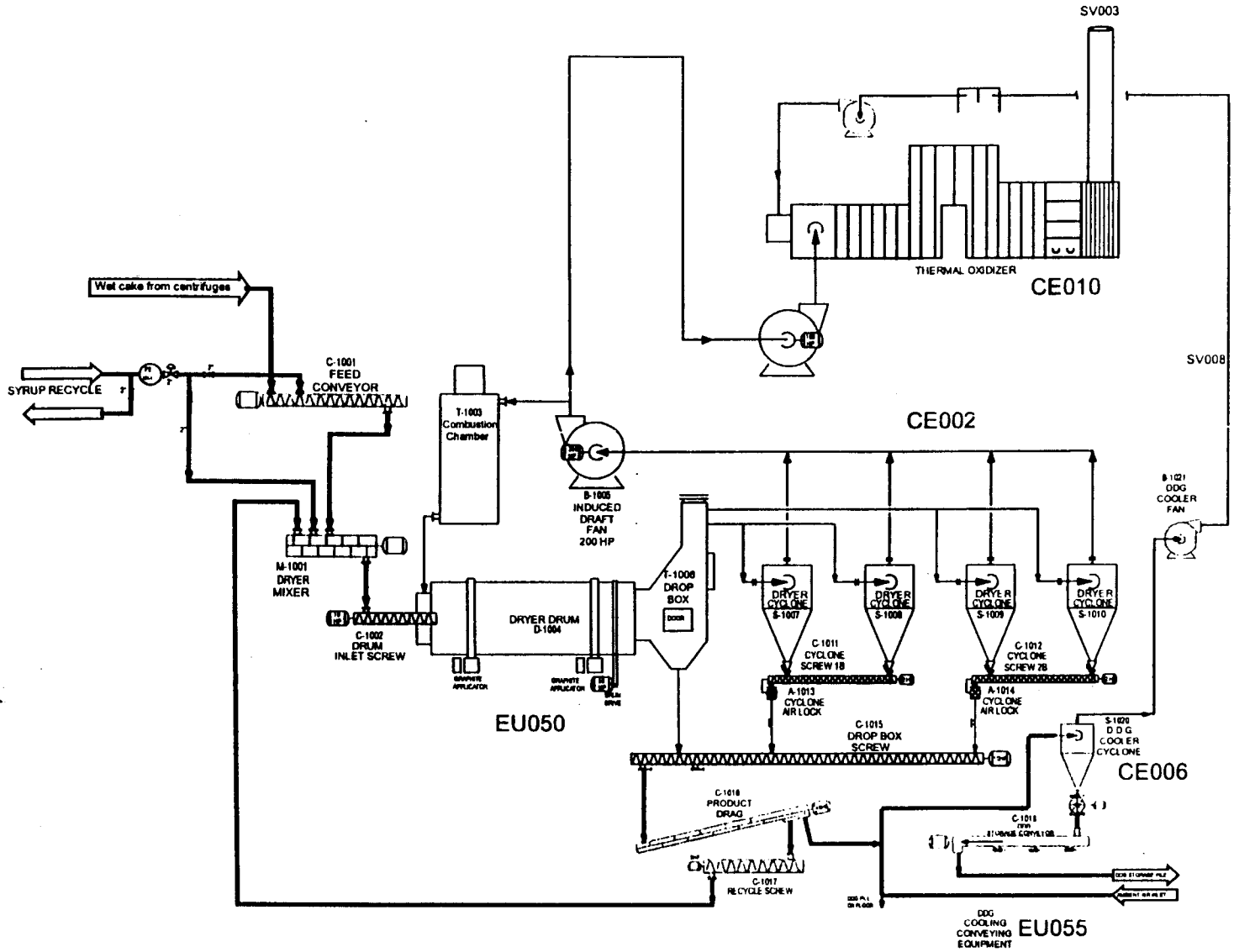

Gopher State Ethanol
Flow Diagram
DDGS Drying & DDGS Cooling

September, 2002

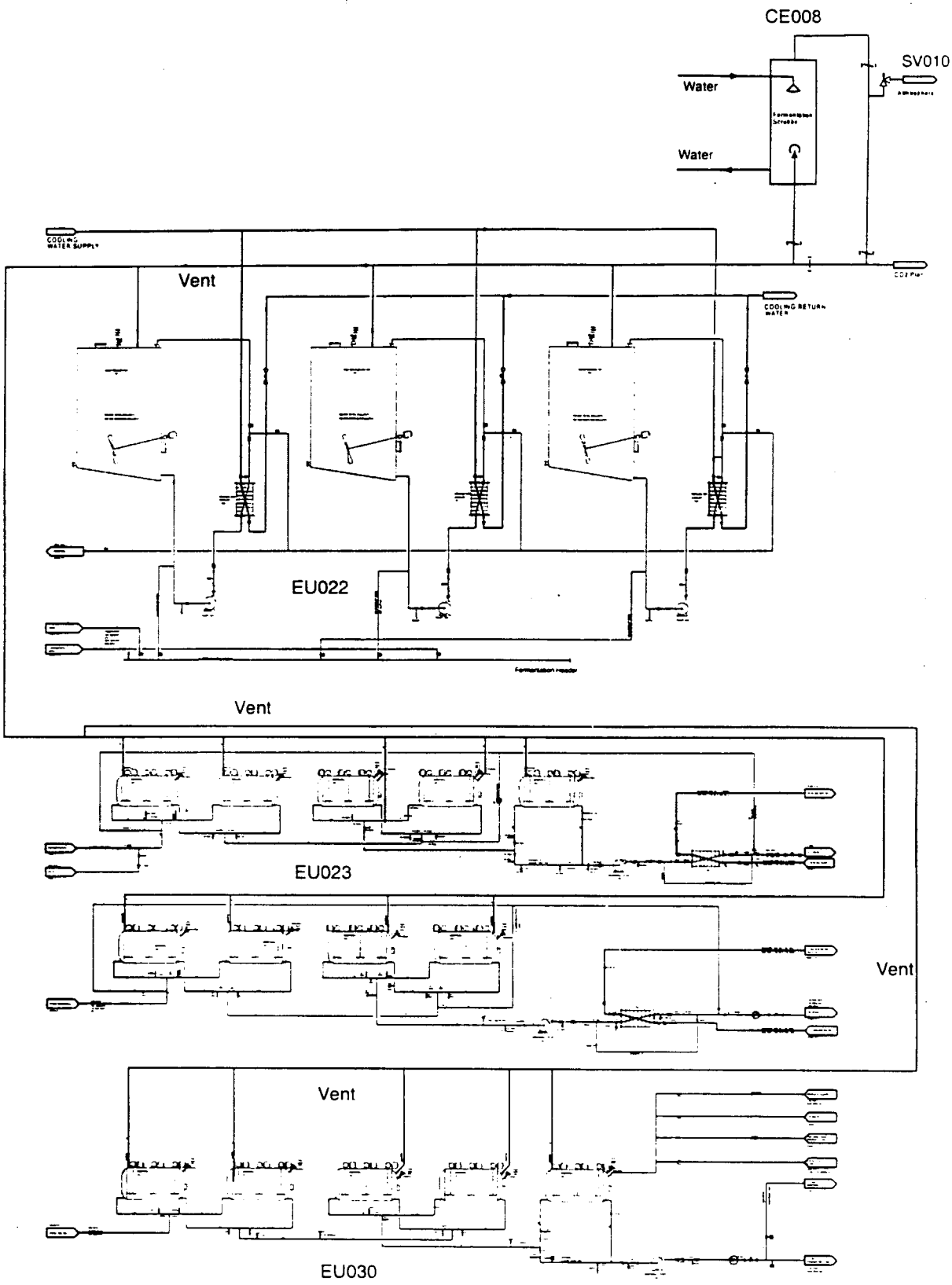

Gopher State Ethanol
Flow Diagram
Fermentation

September, 2002

4.0 EMISSION LIMITS FROM POLLUTION CONTROL EQUIPMENT

Unless otherwise stated, all controlled emission limitations apply at all times except during periods when the process equipment is not operating or during previously planned startup and shutdown periods, and malfunctions as defined in 40 CFR section 63.2. These startup and shutdown periods shall not exceed the minimum amount of time necessary for these events, and during these events, Gopher State Ethanol shall minimize emissions to the greatest extent practicable. To the extent practical, startup and shutdown of control technology systems will be performed during times when process equipment is also shut down. In addition to the limits listed below, all emission sources will comply with a 12-month rolling sum source wide SO_2 cap of 95 TPY.

Any deviation from the requirements in 4.0 and/or 4.1 shall be reported in the quarterly reports and as required under other state and federal rules.

Process Description	Control Device	Control Device Description	Pollutant	Short Term Emission Rate	Long Term Emission Rate
DDGS Drying	CE 002 CE 010	Dryer Cyclones and Thermal Oxidizer	PM/PM10	To be determined pursuant to Paragraph 24 of the Consent Decree.	12-month rolling sum, source-wide PM/PM10 cap of 95 TPY
			VOC	95% reduction or emissions no higher than 10 ppm; lb/hr limits to be established based on performance testing under the process outlined in Paragraph 24 of the Consent Decree.	12-month rolling sum, source-wide VOC cap of 95 TPY.
			HAPs		12-month rolling sum, total facility emission cap of 9.0 TPY for any single HAP and 24.0 TPY for total HAPs.
			NOx	To be determined pursuant to Paragraph 23 of the Consent Decree.	12-month rolling sum, source-wide NOx cap of 95 TPY and 12-month rolling sum for Group NOx limit.
			CO	90% reduction or emissions no higher than 100 ppm	12-month rolling sum, source-wide CO cap of 95 TPY.
Ethanol Fermentation	CE 008	Packed Column Scrubber (existing)	VOC	95% reduction or not to exceed 20 ppm if inlet concentration is	12-month rolling sum, source-wide

	CE (tbd)	Pre-scrubber		less than 200 ppm; lb/hr limits to be established based on performance testing under the process outlined in Paragraph 24 of the Consent Decree.	VOC cap of 95 TPY.
			HAPs		12-month rolling sum, total facility emission cap of 9.0 TPY for any single HAP and 24.0 TPY for total HAPs.
Cooling Cyclone	CE 006	Cyclone (existing)	PM/PM10		12-month rolling sum, source-wide PM/PM10 cap of 95 TPY
			VOC	lb/hr limits to be established pursuant to Paragraph 22 of the Consent Decree.	12-month rolling sum, source-wide VOC cap of 95 TPY.
			HAPs		12-month rolling sum, total facility emission cap of 9.0 TPY for any single HAP and 24.0 TPY for total HAPs.
Ethanol Loading Rack	CE (tbd)	Thermal Oxidizer	VOC	Truck Loadout: 95% reduction of VOCs or no greater than 10 ppm.	12-month rolling sum, source-wide VOC cap of 95 TPY.
			HAPs		12-month rolling sum, total facility emission cap of 9.0 TPY for any single HAP and 24.0 TPY for total HAPs.
Boiler #1	EU001		NOx		12-month rolling sum, source-wide NOx cap of 95 TPY and 12-month rolling sum for Group NOx limit.
Boiler #2	EU002		NOx		12-month rolling sum,

					source-wide NOx cap of 95 TPY and 12-month rolling sum for Group NOx limit.

For all source-wide emission limits established under the Consent Decree, compliance with the "12-month rolling sum" will be demonstrated during the first 11 months of operation (beginning no later than 180 days after startup of the last piece of control equipment) based on the following schedule of limits in tons per month:

	Mo 1	Mo 2	Mo 3	Mo 4	Mo 5	Mo 6	Mo 7	Mo 8	Mo 9	Mo 10	Mo 11
Source wide VOC, CO, NOx and PM/PM10	12	24	36	47	56	64	72	80	84	88	92
NOx for Dryer Boilers #1 and #2 and TO	To be established under the compliance schedule in Section 5.										
Individual HAP/ Total HAPs	1.6/ 3.0	3.2/ 6.0	4.0/ 9.0	4.8/ 12	5.6/ 14	6.4/ 16	7.2/ 18	8.0/ 20	8.2/ 21	8.5/ 22	8.8/ 23

Weekly NOx Calculations.

Weekly NOx emissions will be calculated using the following formula:

Emissions = (A X B) + (C X D) + (E X F)

where,

A = MMbtu used by the dryer during the week

B = NOx emission factor determined for the dryer as determined by Paragraph 23 of the Consent Decree

C = MMbtu used by the thermal oxidizer during the week

D = NOx emission factor determined for the thermal oxidizer as determined by Paragraph 23 of the Consent Decree

E = MMbtu used by Boilers 1 & 2 during the week

F = NOx emission factor determined for Boilers 1 & 2 as determined by Paragraph 23 of the Consent Decree, or AP42 factor

52-Week Rolling Sum Calculation.

A 52-week rolling sum calculation will be performed weekly, along with the weekly NOx emission calculations, to demonstrate compliance with the source-wide NOx emissions limit using the formula below:

52-week rolling sum = Y + Z

Where,

Y = Actual NOx emissions from current week using the formula for the weekly NOx calculations.

Z = Sum of the previous 51 weekly NOx calculations.

4.1 Alternative Operating Scenario

Ethanol truck loadout shall be vented to control equipment at all times that the control equipment is operational. If ethanol truck loadout is vented to the feed dryer control equipment, ethanol truck loadout shall be limited to 2 million gallons per year of uncontrolled operation. If ethanol truck loadout is vented to its own separate control equipment, ethanol truck loadout will not be operated without operational control equipment.

The facility may operate and produce wet cake during periods of dryer control device downtime.

Group NOx Limit Calculation.

Gopher State Ethanol will use the formula below to calculate it's Group NOx limit. The actual calculation will be run within 7 days after the burner size for the new oxidizer is determined.

NOx Limit = [(Sum of all combustion equipment in MMBtu/hr) x 0.04 lb/MMBtu] x 4.38 (tpy/ lb/hour)

NOx Limit = [(Dryer burner rating + Boiler #1 rating + Boiler #2 rating + Oxidizer burner rating (MMBtu/hour) x 0.04 lb/MMBtu)] *4.38 (tpy / lb/hour)

Using the known burner ratings for the dryer and boilers, the equations are:

NOx Limit = [(55 MMBtu/hr + 38.85 MMBtu/hr + 38.85 MMBtu + Oxidizer burner rating in MMBtu/hr) x 0.04 lb/MMBtu)] *4.38 (tpy / lb/hour)

Actual NOx Limit = 23.25 tons/year + [Oxidizer burner rating in MMBtu/hr) x 0.04 lb/MMBtu)] *4.38 (tpy / lb/hour)]

5.0 POLLUTION CONTROL EQUIPMENT INSTALLATION SCHEDULE

	Project	Milestone	Date
1	Thermal Oxidizer	Order new thermal oxidizer Begin installation of new thermal oxidizer Begin operation of new thermal oxidizer	September 30, 2002 Within 15 days of delivery Within 15 days of completed installation
2	Ethanol Loadout	Order new separate thermal oxidizer (if necessary) Begin installation of thermal oxidizer Begin operation of thermal oxidizer	Within 30 days of determining whether or not additional VOC control is needed for the cooling cyclone per Paragraph 22 of the Consent Decree. Within 15 days of delivery Within 15 days of completed installation
3	Fermentation scrubber upgrade	Change stack to vertical discharge Install pre-scrubber	Before October 31, 2002 January 31, 2003
4	Distillation scrubber upgrade	Change stack to vertical discharge Connect slurry mix tank (EU046)	Before October 31, 2002 Done
5	Cooling Cyclone & DDGS Storage	Need for additional control equipment to be determined following analysis per Paragraph 22 of the Consent Decree	
6	Move Wet Cake Loadout To Paved Area	Award Bid Begin Construction Complete Project	August 30, 2002 September 6, 2002 September 30, 2002

7	Update NOx Emissions Limit	Update information in Control Technology Plan	Within 7 days of determining burner size of new oxidizer.

Additional HAPs control

If Gopher State Ethanol is determined to be a major source of HAPs, it will implement methods to return to minor source status. If additional controls are determined to be needed to return to minor source status, Gopher State Ethanol will install additional control within 180 days of major source determination.

6.0 MONITORING PARAMETERS FOR POLLUTION CONTROL DEVICES

The Consent Decree requires that monitoring parameters be established for affected pollution control devices. Gopher State Ethanol agrees to the following monitoring parameters for each of the affected pollution control devices.

Control Device	Control Device Description	Parameter Monitored	Operating Range	Monitoring Frequency
CE 002	Dryer Cyclones	Pressure Drop	2" w.c. < Pressure drop < 8" w.c.	Daily
CE 010	Thermal Oxidizer	Operating temperature	> 1350 °F or as determined by the most recent performance test	Continuous monitor with a recording frequency no greater than once every 3 minutes
CE 006	Cooling Cyclone	Pressure Drop	2" w.c. < Pressure drop < 8" w.c.	Daily
CE 008	Ethanol Fermentation	Pressure drop	1" w.c. < Pressure drop < 10" w.c.	Daily
		Water flow rate	≥ 20 gpm	Daily
CE - (tbd)	Vapor recovery to thermal oxidizer	To be determined	To be determined	To be determined
EU050	Dryer	syrup feed rate and beer feed rate	To be determined	24 hour average Syrup feed rates and beer feed rates recorded every two hours during plant operations, with up to 2 missed readings allowed per 24 hrs.
EU050, CE010, EU001, EU002 CE-TBA	NOx Group	Fuel type and usage		Monitor and record fuel type and usage for each unit or emission point weekly. Calculate NOx emissions weekly based on latest stack test data and correct monthly usage (based on billing).

All monitoring data collected above shall be recorded and maintained on-site. Any deviation of monitoring frequency, record keeping and operating range shall be reported in the quarterly reports and as required under state and federal rules.

7.0 POLLUTION CONTROL DEVICE PERFORMANCE TEST SCHEDULE AND TEST METHODS

The following schedule and methods will be used to demonstrate unit by unit compliance with the emission limits contained in Section 4.0 of this Control Technology Plan and the Consent Decree.

Gopher State Ethanol shall conduct the following performance testing pursuant to the schedule in the Consent Decree.

Currently, speciated VOC and HAPs testing for the thermal oxidizer is for: Ethanol, Acetic Acid, Methanol, Formaldehyde, Acetaldehyde, Acrolein, 2-Furaldehyde, and Lactic Acid. Additional compounds may be added to testing requirements if there is evidence that they contribute significantly to HAPS or total VOC.

Currently, speciated VOC and HAPs testing for the fermentation scrubber is for: Ethanol, Acetic Acid, and Acetaldehyde. Additional compounds may be added to testing requirements if there is evidence that they contribute significantly to HAPS or total VOC.

Engineering tests done prior to the testing required under Paragraph 28 of the Consent Decree will not subject Gopher State Ethanol to stipulated penalties under Paragraph 37 of the Consent Decree.

Emission Unit/Control System DDGS Dryer/Thermal Oxidizer	
Pollutants:	VOC, HAPs, CO, PM/PM10, NOx
Sampling location:	Thermal oxidizer outlet
Test Methods:	Methods 1, 2, 3A or 3B, 4, 7E, 10, 18 NCASI CI/WP-98.01, 5/202, 25A unless THC ppm > 50 ppm, then 25.
Emission Unit/Control System DDGS Dryer/Thermal Oxidizer	
Pollutants:	VOC, CO
Sampling location:	Thermal oxidizer inlet
Test Methods:	Methods 1, 2, 3A or 3B, 4, 10, 25A unless outlet THC ppm > 50 ppm, then 25.
Emission Unit/Control System Fermentation Scrubber	
Pollutants:	VOC, HAPs
Sampling location:	Pre-scrubber inlet and Fermentation scrubber outlet
Test Methods:	Methods 1, 2, 3A, 4, 25 or 25A 18 NCASI CI/WP-98.01 (outlet only)
Emission Unit/Control System Cooling Cyclone	
Pollutants:	VOCs & HAPs
Sampling location:	Cooling cyclone discharge
Test Methods:	Methods 1, 2, 3A, 4, 25A unless THC ppm > 50 ppm, then 25
	Additional testing for HAPS may be added if evaluation under Paragraph 22 of the Consent Decree determines that it is warranted.

Emission Unit/Control System Boilers #1 and #2	
Pollutants:	NOx
Sampling location:	Boiler stack
Test Methods:	Methods 1, 2, 3A, 4, 7E or AP-42 factor

8.0 FUGITIVE DUST EMISSION CONTROL PROGRAM

Continue to comply with current permit requirements and

- The wet cake loading area is being moved to an existing paved area.
- Perform weekly inspection of the roads. Document that the inspection was performed and describe any corrective actions taken.
- Sweep roads as required. "As required" includes, but is not limited to:
  - Silt that has accumulated to visible levels on the road surface
  - Observable fugitive emissions caused by car/truck traffic on roadways

Any deviations from the fugitive dust control program shall be reported in quarterly reports unless more frequent reporting is required by state or federal regulation.